The State Bar of California

REQUEST FOR PROPOSAL

This document is a Request for Proposal ("RFP") for Construction Service - Interior Remodel LA.

Please submit 5 copies of your proposal no later than 5 p.m. on August 15, 2007 to:

The State Bar of California
180 Howard Street
San Francisco, CA 94105-1639

Attn: Sharon Pearl
Real Property Operations
415-538-2340
sheri.pearl@calbar.ca.gov

I. INTRODUCTION

The State Bar of California (" the State Bar"), created in 1927 by the Legislature and adopted into the California Constitution in 1960, is a public corporation within the judicial branch of state government. The State Bar is a unified, or integrated bar, which means that membership is mandatory for all attorneys who are licensed to practice law in the state. In addition to mandated licensing and disciplinary and certification functions, the State Bar offers a number of other programs designed to assist, educate and protect its members and the public. The State Bar has approximately four (4) business locations within the state, all located within the greater Los Angeles, or Sacramento or San Francisco areas. More information about the State Bar can be found in an article entitled *"The State Bar of California – What Does It Do, How Does It Work?"* available on the State Bar's website at http://calbar.ca.gov/state/calbar/calbar_home_generic.

In accordance with statute and the State Bar's procurement policies, contracts of $50,000 or more are subject to formal competitive bidding. As a governmental agency, the State Bar regularly is granted favorable governmental pricing and contract terms.

The State Bar is seeking proposals for the remodel of the Office of Admissions suite leased at 1149 South Hill Street, 4th Floor, Los Angeles. Work includes the remodel

of several storage and work rooms and the expansion of a meeting room. Architectural drawings for the project are completed (see Attachment A).

The State Bar will host a vendor pre-bid conference on July 30, 2007, at 11AM in its Room 720 at 1149 South Hill Street, Los Angeles, California to discuss this request in detail. Attendance is mandatory for all vendors intending to submit a proposal.

Contact with State Bar personnel in connection with this RFP may not be made other than as specified in this RFP. Unauthorized contact of any State Bar personnel may be cause for rejection of a bid. Architectural drawings and modified AIA forms A111-1997 and A201-1997 will be distributed at the conference.

II. GENERAL INFORMATION

The submission requirements for this RFP are set forth below. A proposal shall constitute an irrevocable offer for 90 business days following the deadline for its submission. Reference to a certain number of days in this RFP shall mean business days unless otherwise specified.

A. Submission Requirements

To be considered responsive, a proposal must contain the following, referenced by number and in the order below:

1. A brief description of the history and organization of the bidder's firm, and of any proposed subcontractor.

2. Copies of business licenses, professional certifications or other credentials, together with evidence that bidder, if a corporation, is in good standing and qualified to conduct business in California.

3. The most recent year's annual reports, or comparable document, including detailed current profit and loss, assets and liabilities, and other relevant financial data.

4. A description of similar projects completed by the bidder within the past three (3) years.

5. Qualifications, background and experience of the project director and other staff proposed to work on the project.

6. References with contact information from organizations that have used bidder's services for similar projects/installations within the last 12-18 months.

7. A general description of the techniques, approaches and methods to be used in completing the project.

8. A detailed construction scheduled including a delineation of all work to be completed during swing shift hours 5PM - midnight. Schedule should include all trades involved in the project. List of all subcontractors proposed for the project including two references for each subcontract whose project cost will total $5,000 or more.

9. A detailed cost proposal, including any travel costs and other expenses. As the State Bar may award a contract based on the initial offer, a bidder should make its initial offer on the most favorable terms available. The State Bar reserves the right, however, to have discussions with those bidders falling within a competitive range, and to request revised pricing offers from them and to make an award or conduct negotiations thereafter.

10. A written acknowledgement of the acceptance of the Contracting Requirements set forth in section IV of this RFP. Specific terms may be reserved for future negotiation, but must be clearly identified and reasons given for the reservation.

Proposals which fail to address each of the submission requirements above may be deemed non-responsive and will not be further considered.

B. Rejection of Proposals

The State Bar reserves the right in its sole discretion to reject any or all proposals in whole or in part, without incurring any cost or liability whatsoever. All proposals will be reviewed for completeness of the submission requirements. If a proposal fails to meet a material requirement of the RFP, or if it is incomplete or contains irregularities, the proposal may be rejected. A deviation is material to the extent that a proposal is not in substantial accord with RFP requirements.

Immaterial deviations may cause a bid to be rejected. The State Bar may or may not waive an immaterial deviation or defect in a proposal. The State Bar's waiver of an immaterial deviation or defect shall in no way modify the RFP or excuse a bidder from full compliance with the RFP requirements.

Any proposal may be rejected where it is determined to be not really competitive, or where the cost is not reasonable.

Proposals that contain false or misleading statements may be rejected if in the State Bar's opinion the information was intended to mislead the State Bar regarding a requirement of the RFP.

C. Evaluation Process and Highest Scored Bidder

An evaluation team will review in detail all proposals that are received to determine the Highest Scored Bidder ("HSB").

The State Bar reserves the right to determine the suitability of proposals on the basis of a proposal's meeting administrative requirements, technical requirements, the review team's assessment of the quality and performance of the equipment and services proposed, and cost.

During the evaluation process, the State Bar may require a bidder's representative to answer questions with regard to the proposal and/or require certain bidders to make a formal presentation to the evaluation team and/or the State Bar Senior Executive Team. The State Bar may also have discussions with those bidders falling within a competitive range, and request revised pricing offers from such bidders and make an award and/or conduct negotiations thereafter.

The following criteria will be used in reviewing and comparing the proposals and in determining the HSB. The weight to be assigned to each criterion appears following each item.

1. Responsiveness of the proposal to the submission requirements set forth in the RFP, proof of financial viability (10%).

2. Agreement to the State Bar's contracting requirements as set forth in Section IV of this proposal which includes AIA Document A111 – 1997 "Standard Form of Agreement Between Owner and Contractor where the basis for payment is the COST OF WORK PLUS A FEE with a negotiated Guaranteed Maximum Price" and AIA Document A201 – 1997 "General Conditions of the Contract for Construction" as modified. (15%).

3. The technical ability, capacity, and flexibility of the proposal to provide, at the highest level of quality, the Services in a professional and highly skilled manner as confirmed by the quality of any demonstration, client references and demonstrated success in similar construction projects. Demonstrated ability to complete the construction project within prescribed time frame (10%).

4. The character, integrity, reputation and strength of the project manager, job superintendent and foreman team. Interviews of proposed team will be scheduled for August 16, 2007 (30%).

5. The total cost of the proposal. Costs will be evaluated only if a proposal is determined to be otherwise qualified. Costs should be itemized on Attachment B of this proposal and must be clearly legible (35%).

If a large number of proposals are received, the State Bar reserves the right to review the proposals using a tiered evaluation system. All proposals will be evaluated based on the Submission Requirements and Cost, with the top candidates advancing as a finalist and receiving a full evaluation as outlined above.

D. Award and Execution of Contract

Subject to the State Bar's right to reject any or all proposals, the HSB will be awarded the contract. Notice will be posted at the State Bar's offices at 180 Howard Street, San Francisco, CA and written notice sent to bidders on or about August 17, 2007 of the Bar's intention to award the contract to the HSB. It is anticipated that final selection of the HSB will be made by August 22, 2007. The evaluation team will select a winning proposal subject to approval by the Board of Governors and the owner of the building. Upon selection, the State Bar and the selected Vendor will enter into good faith negotiations on a contract containing, without limitation, the Statement of Work and Contracting Requirements sections below.

No contract or agreement, express or implied, shall exist or be binding on the State Bar before the execution of a written contract by both parties. If agreement on the terms of such a contract cannot be reached after a period deemed reasonable by the State Bar in its sole discretion, the State Bar may enter into negotiations and sign a contract with any other bidder who submitted timely, responsive and responsible proposals to this RFP.

If, after the State Bar and the HSB agree to terms and execute a contract, that contract is terminated for any reason, the State Bar may, in its sole discretion, either enter into negotiations with the next highest scored bidder, or issue a new RFP and begin the proposal process anew.

Questions regarding the State Bar's award of any business on the basis of proposals submitted in response to the RFP, or on any other matter in connection with the selection process, should be addressed in writing to Andrew Conover, Finance Manager, at andrew.conover@calbar.ca.gov.

Where written notice is required in this RFP, the notice must be sent by U.S. mail and either facsimile or e-mail.

E. Errors in the RFP

If a bidder discovers any ambiguity, conflict, discrepancy, omission, or other error in the RFP, the bidder should immediately provide the State Bar with written notice of the problem and request that the RFP be clarified or modified. Without disclosing the source of the request, the State Bar may modify the document prior to the date fixed for submission of proposals by issuing an addendum to all potential bidders to whom the RFP was sent.

If prior to the date fixed for submissions, a bidder knows of or should have known of an error in the RFP but fails to notify the State Bar of the error, the bidder shall bid at its own risk, and if, awarded the contract, shall not be entitled to additional compensation or time by reason of the error or its later correction.

F. Questions Regarding the RFP

Questions regarding the RFP may be addressed in person at the vendor pre-bid conference on July 30, 2007 at 11AM in its Room 720 at 1149 South Hill Street, Los Angeles, California. Questions after this conference may be addressed in writing to Sharon Pearl at sheri.pearl@calbar.ca.gov. All questions must be submitted no later than 5 days prior to the date for submission of proposals. Questions and answers regarding the RFP may be shared with all bidders known to be interested in submitting a proposal.

If a question relates to a proprietary aspect of its proposal and the question would expose proprietary information if disclosed to competitors, the bidder may submit the question in writing, conspicuously marking it as "CONFIDENTIAL." With the question, the bidder must submit a statement explaining why the question is sensitive. If the State Bar concurs that the disclosure of the question or answer would expose proprietary information, the question will be answered, and both the question and answer will be kept in confidence. If the State Bar does not concur regarding the proprietary nature of the question, the question will not be answered in this manner and the bidder will be notified.

A bidder who believes that one or more of the RFP's requirements is onerous or unfair, or unnecessarily precludes less costly or alternative solutions, may submit a written request that the RFP be changed. The request must set forth the recommended change and reason for proposing the change. The State Bar must receive any such request no later than 5 days before the deadline for submitting proposals.

G. Addenda

The State Bar may modify the RFP prior to the date fixed for submission by posting, mailing, emailing or faxing an addendum to the bidders known to be interested in submitting a proposal. If any bidder determines that an addendum unnecessarily

restricts its ability to bid, it must notify the State Bar in writing no later than 5 days before the deadline for submitting proposals.

H. Withdrawal and Resubmission/Modification of Proposals

A proposal may be withdrawn at any time prior to the deadline for submitting proposals by notifying the State Bar in writing of its withdrawal. The notice must be signed by the bidder. The bidder may thereafter submit a new or modified proposal, provided that it is received at the State Bar no later than the deadline.

Modification offered in any other manner, oral or written, will not be considered. Proposals cannot be changed after the evaluation process begins.

I. Protest Procedure

A bidder may protest the award if it meets all the following conditions:

1. The bidder has submitted a proposal that it believes is or should have been the HSB, under the criteria set forth above;

2. The bidder believes that its proposal meets the State Bar's administrative and technical requirements, proposes services of proven quality and performance, and offers a competitive cost to the State Bar; and

3. The bidder believes that the State Bar has incorrectly selected another bidder.

A bidder qualified to protest should contact Andrew Conover, Finance Manager, (415) 538-2207, to attempt an informal resolution. If this contact is unable to resolve the protest to the bidder's satisfaction, the bidder must file a written protest within 5 days of the notice of intention to award the contract. The written protest must state the facts surrounding the issue and the reasons the bidder believes the award to be invalid. The protest must be sent by certified or registered mail or delivered personally to:

The State Bar of California
180 Howard Street
San Francisco, CA 94105-1639

Attention: Peggy Van Horn, Chief Financial Officer

Protests will be reviewed and decided by the State Bar's Award Protest Team within 30 days after the State Bar issues written acknowledgment of the protest. In the event

that a protest is filed, the contract award will be postponed pending resolution of the protest.

J. News Releases

News releases pertaining to the award of a contract may not be made without the prior written approval of the State Bar.

K. Disposition of Materials

All materials submitted in response to an RFP will become the property of the State Bar of California and will be returned only at the State Bar's option and at the expense of the bidder. One copy of each proposal will be retained for the State Bar's official files and become a public record. Specific limited pages of a proposal, not including proposed cost and compensation, may be marked as proprietary and confidential. The bidder's consent will be requested before release of such pages to non-State Bar personnel. By submitting a proposal, a bidder agrees to these terms and waives any right to pursue a cause of action for damages incurred as a result of the release of any information contained in a proposal.

III. STATEMENT OF WORK

1. Introduction

The State Bar of California leases seven (7) floors at the AT&T Tower in downtown Los Angeles. The majority of the 4th Floor is occupied by the Bar's Office of Admissions. The Office of Admissions requires additional storage room, meeting room and work room space at this time resulting in the need for interior modifications to its office suite.

2. Construction Work

The project involves the remodel and expansion of several storage rooms and work rooms as well as one internal meeting room. The project also involves the build out of a large storage/work room and a mail processing room. All work will be performed in the Office of Admissions on the 4th floor. Contractor shall perform all general contractor services associated with the tenant improvement project on the 4th floor in accordance with the architectural construction drawings prepared by Widom Wein Cohen O'Leary Tersawa Architects ("WWCOT") listed below ("the Services"). Contractor shall oversee the work of all subcontractors. All contractors shall be members in good standing of their respective trade unions.

Contractor must file a payment a performance bond in conformance with Civic Code section 3247 t. seq., as a condition of being awarded this contract. Cost of the bond will be included in the Guaranteed Maximum Price.

Work will be performed in an area presently occupied by State Bar staff. All loud noise producing work must be performed outside of regular office hours, which are 8:45 a.m. – 5:00 p.m. Contractor must make every effort to minimize disruption to the work environment and to protect the premises and Bar employees through the use of plywood and plastic/polyurethane barriers. The State Bar of California will work closely with Contractor to coordinate scheduling and staging needs.

3. Drawings

Included as Attachment A in PDF Format. Full size drawing will be provided to interested bidders at the mandatory bidder's conference.

A. Documents Prepared by WWCOT

Sheet T-1	Title and General Notes
Sheet A-1	Demolition Plan
Sheet A-2	Construction Plan
Sheet A-3	Reflected Ceiling Plan
Sheet A-4	Power and Communication Plan
Sheet A-5	Finish Plan
Sheet D-1	Details

4. Job Meetings

Weekly job meetings will be required during the course of construction. Meetings will be held on the job site during regular business hours, 8:45 a.m. – 5:00 p.m. on a day to be determined by The State Bar of California.

Attendance:

a. General Contractor's Superintendent and Project Manager
b. Director of Real Property Operations, The State Bar of California
c. WWCOT Architect
d. Building Engineer (as needed)
e. Office of Admissions Representative, The State Bar of California
f. Administrative Services Representative, The State Bar of California (as needed)

5. Progress Schedule

A progress schedule in the form of a bar chart of CPM must be submitted upon execution of the contractor.

6. Subcontractor Bidding Requirements

All subcontractor bid amounts should be included in the RFP submission and the name of the bidder that the General Contractor has chosen should be underlined. Contractor shall solicit no fewer than three (3) competitive bids from qualified subcontractors for trades in excess of $15,000 in preparation of its bid submission to The State Bar of California. Within 15 days the execution of the contract, General Contractor will be required to provide copies of fully executed subcontractor agreements to The State Bar of California's representatives.

IV. CONTRACTING REQUIREMENTS

Upon selection of a vendor, the terms set forth in this RFP and attachments are to be embodied in a definitive agreement, including the AIA documents distributed at vendor meeting, and containing such additional covenants and other provisions as may be mutually acceptable. Submission of a proposal shall constitute agreement to contract on those terms, except for any term specifically reserved in the proposal for future negotiation.

Contractor's total Guaranteed Maximum Price for the construction contract will consist of the sum of Contractor's bids as submitted in its bid form (Guaranteed Maximum Price, overhead/profit, general condition cost) plus a five percent (5%) contingency fund. Upon establishing the guaranteed maximum price, the State Bar shall execute a construction contract in a form substantially similar to the forms of contract provided at the pre-bidders conference. Insurance requirements for the project should be consistent with those detailed in Exhibit E of the Standard Form of Agreement.

Attachment A

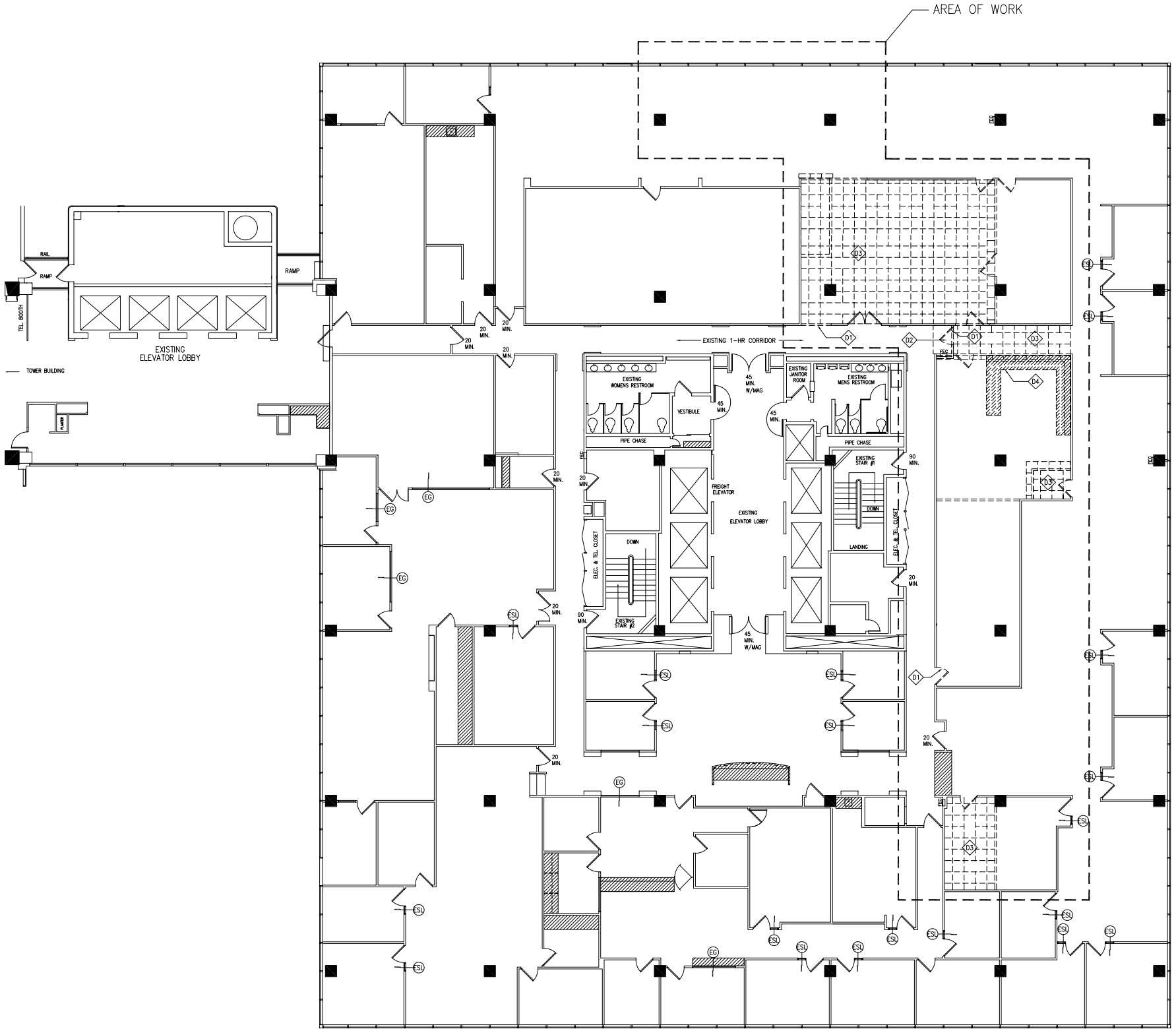

Demolition Plan Legend

- EXISTING PARTITION OR RATED CORE PARTITION TO REMAIN
- EXISTING PARTITION TO BE REMOVED
- (ESL) EXISTING ALLUM. FRAMED SIDELITE INTERGRAL W/ DOOR TO REMAIN
- (ESL) EXISTING ALLUM. FRAMED SIDELITE INTERGRAL W/ DOOR TO BE DEMOLISHED
- (EG) EXISTING FRAMED GLASS PARTITION TO REMAIN
- EXISTING DOOR AND FRAME TO REMAIN
  __ MIN. = __ MIN. FIRERATED
  GL = GLASS DOOR
  EL = EXISTING LOCKSET
- EXISTING DOOR AND FRAME TO BE REMOVED OR SAVED FOR RELOCATION
- EXISTING MILLWORK TO REMAIN
- EXISTING MILLWORK TO BE REMOVED & SAVED FOR RELOCATION

Demolition Plan General Notes

1. PARTITIONS: EXISTING PARTITIONS ARE TO REMAIN THRU-OUT SUITE U.O.N. EXISTING WALLCOVERING IS TO BE REMAIN THRU-OUT SUITE U.O.N. PROTECT DURING CONSTRUCTION. G.C. TO INSPECT PREMISES PRIOR TO BID TO DETERMINATE EXISTING WALLCOVERING LOCATIONS. DEMO EXISTING PARTITIONS AS SHOWN ON DEMO PLAN. REMOVE ALL STANDARD BRACKETS THRU-OUT SUITE ON EXISTING PARTITIONS.
2. FLOORING: DEMO ALL EXISTING FLOORING & BASE THRU-OUT SUITE U.O.N.
3. POWER & COMMUNICATIONS: ELECTRICAL & COMMUNICATIONS ARE TO REMAIN THRU-OUT SUITE U.O.N. WHERE PARTITIONS ARE REMOVED, CONTRACTOR SHALL REMOVE ALL ELECTRICAL AND TELEPHONE CONDUITS BACK TO ELECTRICAL SUB PANEL OR TELEPHONE BACKBOARD. DEMO ALL UNUSED CONDUIT & TELE/DATA CABLES THRU-OUT SUITE U.O.N. VERIFY W/TENANT PRIOR TO DEMO OF TELE/DATA CABLES). SEE POWER & COMMUNICATIONS PLAN SHEET A-4 FOR DEMO OF OUTLETS ON EXISTING TO REMAIN WALLS.
4. MILLWORK: EXISTING BUILT-IN MILLWORK IS TO REMAIN THRU-OUT SUITE WHERE INDICATED U.O.N. PROTECT DURING CONSTRUCTION. DEMO EXISTING BUILT-IN MILLWORK & SAVE FOR RELOCATION WHERE INDICATED ON PLAN.
5. DOORS: EXISTING DOORS ARE TO REMAIN THRU-OUT SUITE U.O.N. ALL DOORS & SIDELITE WINDOWS TO BE REUSED, SHALL BE SET ASIDE TO PREVENT ANY DAMAGE DUE TO DEMOLITION.
6. CEILING: EXISTING CEILING SYSTEM & LIGHTING ARE TO REMAIN THRU-OUT SUITE U.O.N. SEE KEY NOTES D2 & D3 SHEET A-3 FOR ADDITIONAL DEMO FOR CEILING.
7. EXISTING BLINDS ARE TO REMAIN THRU-OUT SUITE U.O.N. PROTECT AS REQUIRED DURING CONSTRUCTION.
8. CONTRACTOR TO WALK JOBSITE AND INCLUDE OTHER MISC. DEMOLITION NOT SPECIFICALLY SHOWN ON PLAN AND IS NOT RETAINED OR REUSED IN THE NEW CONSTRUCTION PLAN (I.E. OLD ELECTRICAL METER AND A/C UNITS, POWER POLES, SURFACE MOUNTED W/REMOLD OR CONDUITS, WATER HEATERS AND EQUIPMENT)

Demolition Plan Key Notes

SEE PLAN FOR LOCATION

- D1 DEMO PORTION OF 1-HR CORRIDOR PARTITION FOR NEW DOOR ASSEMBLY OR DEMO 20 MIN. DOOR ASSEMBLY IN PUBLIC CORRIDOR WHERE INDICATED. G.C. TO MAINTAIN INTEGRITY OF 1-HR CORRIDOR AS REQUIRED BY CODE DURING CONSTRUCTION.
- D2 REMOVE EXISTING DRYWALL CEILING WHERE INDICATED. SEE CEILING PLAN A-3 FOR EXACT LOCATION & ADDITIONAL INFORMATION.
- D3 DEMOLISH EXISTING CEILING GRID & TILE WHERE INDICATED. SEE CEILING PLAN A-3 FOR EXACT LOCATION & ADDITIONAL LOCATION.
- D4 EXISTING MILLWORK TO BE CAREFULLY REMOVED & SAVED FOR RELOCATION REFER TO SHEET A-2 FOR EXACT LOCATION.

Demolition Plan SCALE: 1/8"=1'-0"

Demolition Plan Notes and Legend

WWC OT
Widom Wein Cohen O'Leary Terasawa

3130 Wilshire Boulevard
Sixth Floor
Santa Monica, California 90403
T (310) 828-9040
F (310) 453-9432
www.wwcot.com

Inland Empire
Palm Springs
Shanghai, China

Building Department Submittal:
Issued For Bid:
Issued For Construction:

Issued for Review & Approval: 06.19.07

State Bar of California 4th Floor-Remodel

1149 South Hill Street
4th Floor-Remodel
Los Angeles, Ca 90015

Project Number: 075026.00

Demolition Plan

Date: 05-14-07
Drawn By: DM
Checked By: BL

A-1
Sheet No.

File Path & Name: F:\PROJECTS\075026-00\A-CD\SHEETS\A-1.DWG
© WWCOT 2007 Jul 11, 2007 - 02:42 pm

Attachmentt A

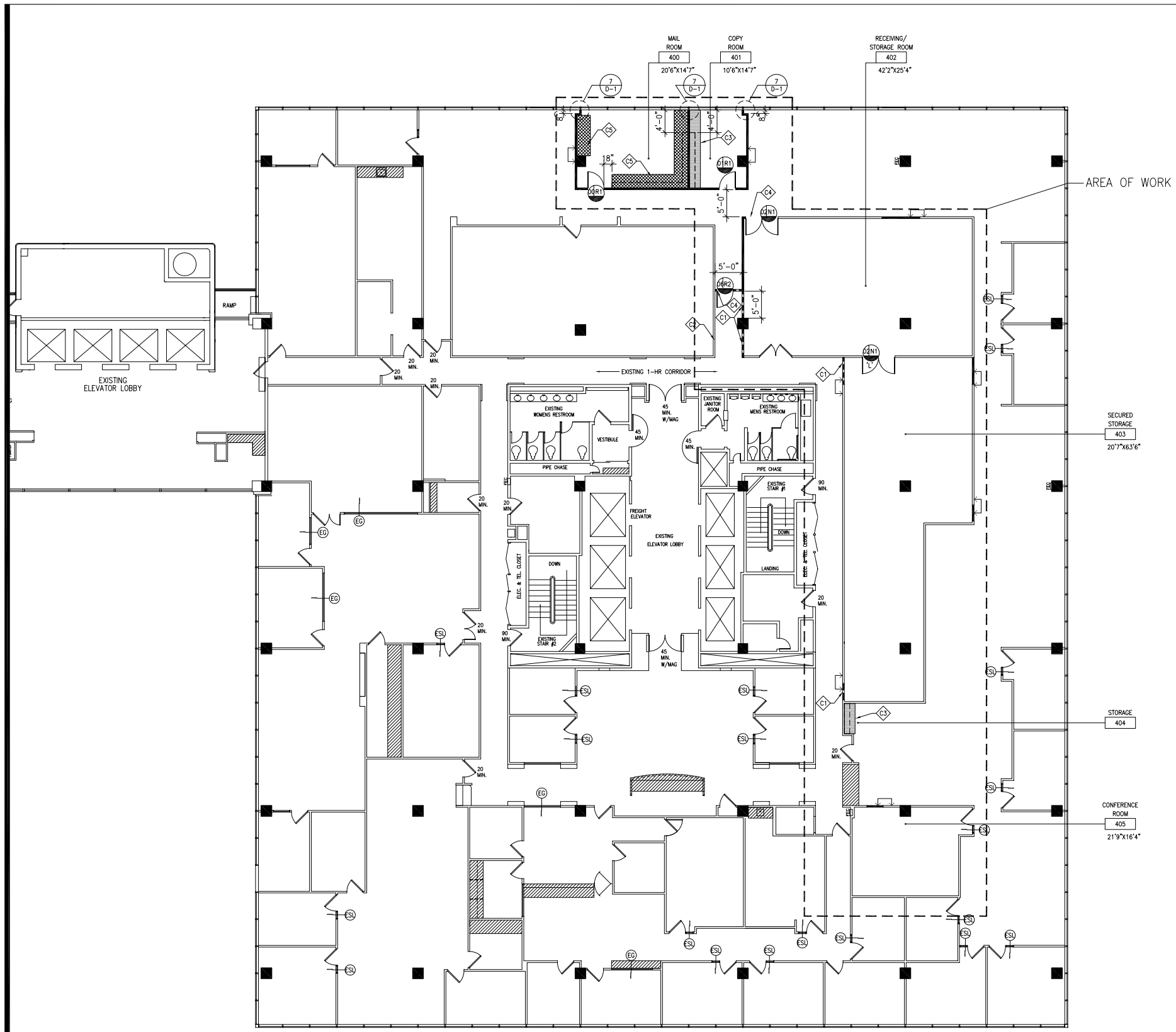

Demolition Plan Legend

- EXISTING PARTITION OR RATED CORE PARTITION TO REMAIN
- NEW FLOOR TO CEILING INTERIOR PARTITION (4 / D-1)
- NEW 1-HR FIRE RATED INTERIOR PARTITION (1 / D-1)
- ESL — EXISTING FULL HEIGHT ALUM. FRAMED SIDELITE INTERGRAL W/ DOOR TO REMAIN
- EG — EXISTING FULL HEIGHT FRAMED GLASS PARTITION TO REMAIN
- EXISTING MILLWORK TO REMAIN.
- NEW MILLWORK
- RELOCATED MILLWORK
- ALIGN

Construction Plan Key Notes:

SEE PLAN FOR LOCATION

- C1 — EXTEND 1-HR CONSTRUCTION IN PUBLIC CORRIDOR AS REQUIRED AT NEW PARTITIONS. (1 / D-1)
- C2 — UPGRADE EXISTING PARTITION TO MATCH 1-HR PARTITION FOR SUITE SEPARATION TO MEET CODE REQUIREMENTS. PROVIDE FIRE DAMPERS FOR ALL HVAC PENETRATIONS. SEAL ALL PENETRATIONS AS REQUIRED. (1 / D-1)
- C3 — PROVIDE & INSTALL NEW BUILT-IN 24" DEEP PLASTIC LAMINATE COUNTERTOP @ +30" A.F.F. WITH LOWER STORAGE CABINETS WITH DOORS AND ADJUSTABLE SHELVES IN STORAGE AREA #404. PROVIDE & INSTALL 14" DEEP UPPER CABINETS W/DOORS AND ADJ. SHELVES ABOVE TO CEILING. (14 / D-1) (15 / D-1)
- C4 — PROVIDE & INSTALL NEW ELECTRIC LOCKSET ON DOORS WHERE INDICATED. TENATN SECURITY CONSULTANT TO TIE INTO CARD READER.
- C5 — G.C. TO RELOCATE EXISTING MILLWORK WHERE INDICATED. ADJUST DOORS, DRAWERS & ADJUSTABLE SHELVES TO WORKING CONDITION AS REQUIRED.

Door Legend:

- EXISTING DOOR ASSEMBLY
- INDICATES FIRE RATING OF DOOR ASSEMBLY GL = GLASS DOOR
- NEW OR/ RELOCATED DOOR ASSEMBLY SEE BELOW FOR DESCRIPTION.

Typical Door Information:

WALL STOP: ALIGN WITH DOOR HANDLE — OR — FLOOR STOP: MOUNT 4" FROM EDGE OF DOOR

NOTE: ALL DOORS SHALL BE 3'-0" W.(U.O.N.) x 6'-8" H. MIN. AND HAVE LEVER STYLE HARDWARE CENTERED AT 30"-40" AFF.

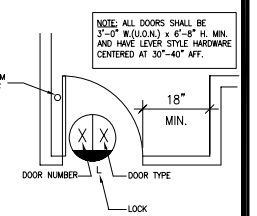

Door Notes:

1. IT IS THE CONTRACTOR'S RESPONSIBILITY TO VERIFY THE QUANTITY AND CONDITION OF ALL EXISTING DOORS PRIOR TO BID.
2. ALL NEW WOOD DOORS TO MATCH EXISTING.
3. ALL RATED DOORS SHALL HAVE RATING AS NOTED. CONTRACTOR TO REPLACE DOORS OR HAVE PROPER RATING AGENCY TO APPLY PROPER RATING LABEL.
4. NAME PLATES AND/OR SIGN AGE ON ALL DOORS THAT ARE TO BE REUSED SHALL BE REMOVED AND THE DOOR REFINISH TO LOOK LIKE NEW.
5. CONTRACTOR TO VERIFY THAT EXIST. DOORS FRAMES AND HARDWARE TO BE REUSED COMPLY WITH FIRE RATING REQUIREMENT (WHERE OCCURS) AND BUILDING STANDARD.
6. PROVIDE FLOOR DOOR STOPS AT DOORS IF MISSING TO MATCH EXISTING
7. PROVIDE THRESHOLDS AT ALL NEW AND EXISTING RATED DOORS.
8. ALL DOORS TO HAVE LEVER HARDWARE PER ADA REQUIREMENTS.

DOOR TYPE	DESCRIPTION
X N1 *	NEW BUILDING STANDARD 3'-0" WIDE x BUILDING STANDARD HEIGHT NON RATED DOOR ASSEMBLY. INCLUDES: DOOR, FRAME, HINGES, DOOR STOP, LATCH SET HARDWARE. 'L' INDICATES LOCKSET TYPE HARDWARE 'C' INDICATES SELF CLOSER
X R1 *	NEW BUILDING STANDARD 3'-0" WIDE x BUILDING STANDARD HEIGHT NON RATED DOOR ASSEMBLY. INCLUDES: DOOR, FRAME, HINGES, DOOR STOP, LATCH SET HARDWARE. 'L' INDICATES LOCKSET TYPE HARDWARE 'C' INDICATES SELF CLOSER
X R2	NEW BUILDING STANDARD 3'-0" WIDE x BUILDING STANDARD HEIGHT 20 MIN. FIRE RATED DOUBLE DOOR ASSEMBLY. INCLUDES: DOORS, FRAME, HINGES, DOOR STOP, SELF CLOSER, ASTREGAL TO ACTIVE LEAF, COORDINATOR, SMOKE GASKET & LOCKSET LEVER TYPE HARDWARE.

Construction Plan General Notes:

1. **PARTITIONS:** EXISTING PARTITIONS TO REMAIN THROUGHOUT SUITE (U.O.N.) PROVIDE AND INSTALL NEW PARTITIONS AS SHOWN. PAINT ALL PARTITIONS THRU-OUT SUITE W/ BUILDING STANDARD PAINT TO MATCH EXISTING U.O.N. EXISTING WALL COVERING IS TO REMAIN THROUGHOUT SUITE U.O.N. PATCH/REPAIR/REPLACE AS REQUIRED TO NEW-LIKE CONDITION. PREP/SKIMCOAT PARTITIONS TO RECEIVE NEW PAINT AS REQUIRED.
2. **DOORS:** EXISTING DOORS TO REMAIN THROUGHOUT SUITE (U.O.N.). PROVIDE AND INSTALL NEW BUILDING STANDARD DOOR ASSEMBLIES AS SHOWN ON PLAN. FINISH TO MATCH EXISTING. RELOCATE EXISTING OR REPLACE MISSING HARDWARE TO MATCH EXISTING.
3. G.C. TO PROVIDE ADEQUATE STRUCTURAL BRACING SUPPORT IN WALLS FOR MILLWORK, WALL HUNG SINKS AND WALL HUNG TV UNITS.
4. UPGRADE FIRE-LIFE-SAFETY SYSTEM AS REQUIRED TO MEET CURRENT CODE REQUIREMENTS IN REMODEL AREAS. FLS TO BE DESIGN-BUILD.
5. WHERE EXISTING PARTITIONS, FLOORING AND SUBFLOORING ARE REMOVED, CONTRACTOR SHALL PREP FLOOR SLAB AS REQUIRED FOR PROPER FLAT FLOORCOVERING INSTALLATION THRU-OUT SUITE.

Construction Plan SCALE: 1/8"=1'-0"

Construction and Door Notes and Legend

WWC OT
Widom Wein Cohen O'Leary Terasawa

3130 Wilshire Boulevard
Sixth Floor
Santa Monica, California 90403
T (310) 828-0040
F (310) 453-9432
www.wwcot.com

Inland Emptre
Palm Syrings
Shanghai, China

Building Department Submittal: _____
Issued For Bid: _____
Issued For Construction: _____

Issued for Review & Approval: 06.19.07

State Bar of California 4th Floor-Remodel

1149 South Hill Street
4th Floor-Remodel
Los Angeles, Ca 90015

Project Number: 075026.00

Construction Plan

Date: 05-14-07
Drawn By: DM
Checked By: BL

A-2
Sheet No.

File Path & Name: F:\PROJECTS\075026.00\A-CD\SHEETS\A-2.DWG
© WWCOT 2007 Jul 14, 2007 - 02:41 pm

Attachmentt A

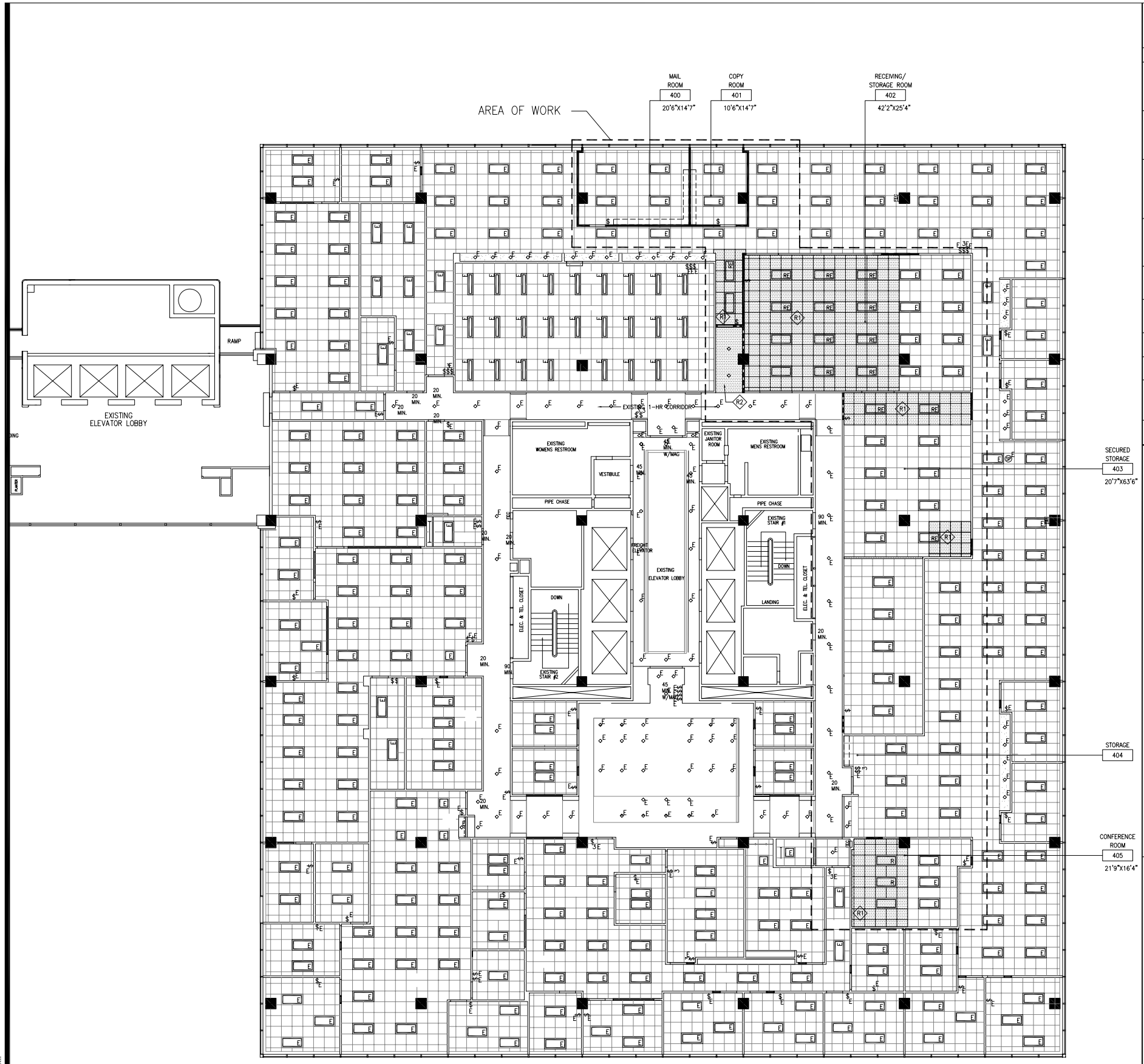

Reflected Ceiling Legend:

Symbol	Description
	NEW 24"X24" SUSPENDED CEILING GRID AND ACOUSTICAL TILES TO MATCH EXISTING. SEE PLAN FOR CEILING HEIGHTS. NEW CEILING GRID AND TILES TO MATCH EXISTING INSTALLED PER DETAILS 13-D1 AND 14-D1. PROVIDE AND INSTALL PER LATEST CODE REQUIREMENTS.
	NEW DRYWALL SOFFIT TO MATCH & ALIGN WITH EXISTING. FINISH TO MATCH EXISTING WALL FINISH, U.O.N. (11 / D-1)
	EXISTING 2'x2' CEILING GRID & TILE TO REMAIN. REPLACE MISSING, DAMAGED, CHIPPED & STAINED TILES W/NEW TO MATCH EXISTING. IF TILES ARE NOT UNIFORM INSTALL NEW TILES IN ENTIRE ROOMS & RELOCATE TILES FROM THOSE ROOMS TO OPEN AREAS TO MAINTAIN UNIFORM APPEARANCE WITH LINE OF SITE AS REQUIRED. REPLACE DAMAGED & MISSING GRID TO MATCH EXISTING. UPGRADE GRID TO MEET CURRENT SEISMIC CODE REQUIREMENTS. SEE (9 / D-1) (10 / D-1)
	EXISTING DRYWALL CEILING GRID TO REMAIN.
	NEW BUILDING STANDARD RECESSED FLUORESCENT LIGHT FIXTURE TO MATCH EXISTING.
	EXISTING WALLWASHER DOWNLIGHT FIXTURE TO REMAIN
	EXISTING BUILDING STANDARD RECESSED FLUORESCENT LIGHT FIXTURE TO REMAIN.
S(a,b,c,d)	NEW BLDG. STD. WALL MOUNTED SWITCH (a,b,c,d...INDICATES CIRCUIT ALLOCATION)
DIRECTIONAL ARROWS	BUILDING STANDARD EXIT SIGN AS SHOWN. ILLUMINATED FACE.

NOTE FOR ALL: E = EXISTING TO REMAIN D = DEMO & PATCH WALL OR CEILING RE = RELOCATED EXISTING

Reflected Ceiling Plan General Notes:

1. EXISTING 2' x 2' CEILING GRID AND TILE OR DRYWALL CEILINGS ARE TO REMAIN THRU-OUT SUITE U.O.N. REPLACE DAMAGED & MISSING CEILING GRID & TILES TO ALIGN & MATCH WITH EXISTING AS REQUIRED IN REMODEL AREAS. UPGRADE CEILING TO CURRENT SEISMIC CODE REQUIREMENTS AS REQ'D IN REMODEL AREA. GENERAL CONTRACTOR TO WALK JOB SITE TO VERIFY EXISTING CEILING CONDITION AND EXISITING DUCT HEIGHTS PRIOR TO BID PRICING.
2. REWORK EXISTING HVAC & SPRINKLER SYSTEM AS REQUIRED IN REMODEL AREAS PER NEW WALL LAY-OUT & CURRENT CODE. PROVIDE & INSTALL NEW HVAC AS REQUIRED. MECHANICAL ENGINEERING TO BE DESIGN BUILD BY GENERAL CONTRACTOR.
3. ALL EXISTING SPRINKLERS, CEILING TILES, GRIDS AND FIXTURES TO REMAIN SHALL BE RESTORED TO WORKING ORDER AND CLEANED.
4. ALL EXISTING/RELOCATED/NEW LIGHT FIXTURES SHALL BE INSTALLED WITH SPLAY WIRE.
5. REPLACE ALL EXISTING SWITCHES AND THERMOSTATS THAT ARE NOT FUNCTIONAL. AND REPLACE ALL COVER PLATES THAT ARE SCRATCHED WITH BLDG SWITCH PLATE.
6. NEW SWITCHES AND THERMOSTATS TO BE WITHIN 12" OF A DOOR JAMB OR A CORNER, DO NOT LEAVE ON MID WALL. NEW SWITCH HEIGHTS TO MATCH EXISTING, NEW THERMOSTATS TO BE 48" A.F.F.
7. UPGRADE FIRE-LIFE-SAFETY SYSTEM TO CURRENT CODE REQUIREMENTS AS REQUIRED. FIRE LIFE SAFETY TO BE DESIGN BUILD.
8. SEE DETAIL (18 / D-1) FOR TYPICAL MOUNTING HEIGHTS FOR TELEPHONE AND ELECTRICAL.
9. EXISTING LIGHT FIXTURES TO REMAIN OR TO BE RELOCATED AS NOTED. REWORK OR PROVIDE NEW TO MATCH EXISTING AS NOTED. PROVIDE & INSTALL NEW SWITCHES AS REQ'D. TO MATCH EXISTING AND REWORK SWITCHING AND ELECTRICAL CIRCUITING AS REQUIRED. REWORK or/ PROVIDE & INSTALL NEW EXIT SIGNS AND EMERGENCY LIGHTS AS REQUIRED PER CODE. CLEAN LIGHT LENSES AND REPLACE NONFUNCTIONAL LAMPS @ EXISTING LIGHTING FIXTURES IN REMODEL AREAS. CONTRACTOR TO VISIT JOB SITE PRIOR TO BID PRICING TO VERIFY AMOUNT AND CONDITION OF EXISTING LIGHT FIXTURES,EXIT SIGNS AND DUCT HEIGHTS.
10. MODIFY EXISTING H.V.A.C. THROUGHOUT SUITE AS NEEDED IN REMODEL AREAS. MECHANICAL ENGINEERING TO BE DESIGN BUILD BY GENERAL CONTRACTOR.

Reflected Ceiling Plan Key Notes:

SEE PLAN FOR LOCATION

R1 PROVIDE & INSTALL NEW CEILING GRID & TILE TO MATCH & ALIGN W/EXISTING.

R2 PROVIDE & INSTALL NEW DRYWALL CEILING TO MATCH & ALIGN W/EXISTING.

Reflected Ceiling Plan SCALE: 1/8"=1'-0"

Reflected Ceiling Plan Notes and Legend

WWC OT
Widom Wein Cohen O'Leary Terasawa

3130 Wilshire Boulevard
Sixth Floor
Santa Monica, California 90403
T (310) 828-9040
F (310) 453-9432
www.wwcot.com

Inland Empire
Palm Springs
Shanghai, China

Building Department Submittal: _____
Issued For Bid: _____
Issued For Construction: _____

Issued for Review & Approval: 06.19.07

State Bar of California 4th Floor-Remodel

1149 South Hill Street
4th Floor-Remodel
Los Angeles, Ca 90015

Project Number: 075026.00

Reflected Ceiling Plan

Date: 05-14-07
Drawn By: DM
Checked By: BL

A-3
Sheet No.

File Path & Name: F:\PROJECTS\075026-00\A-CD SHEETS\A-3.DWG
© WWCOT 2007 Jul 11, 2007 - 02:41 pm

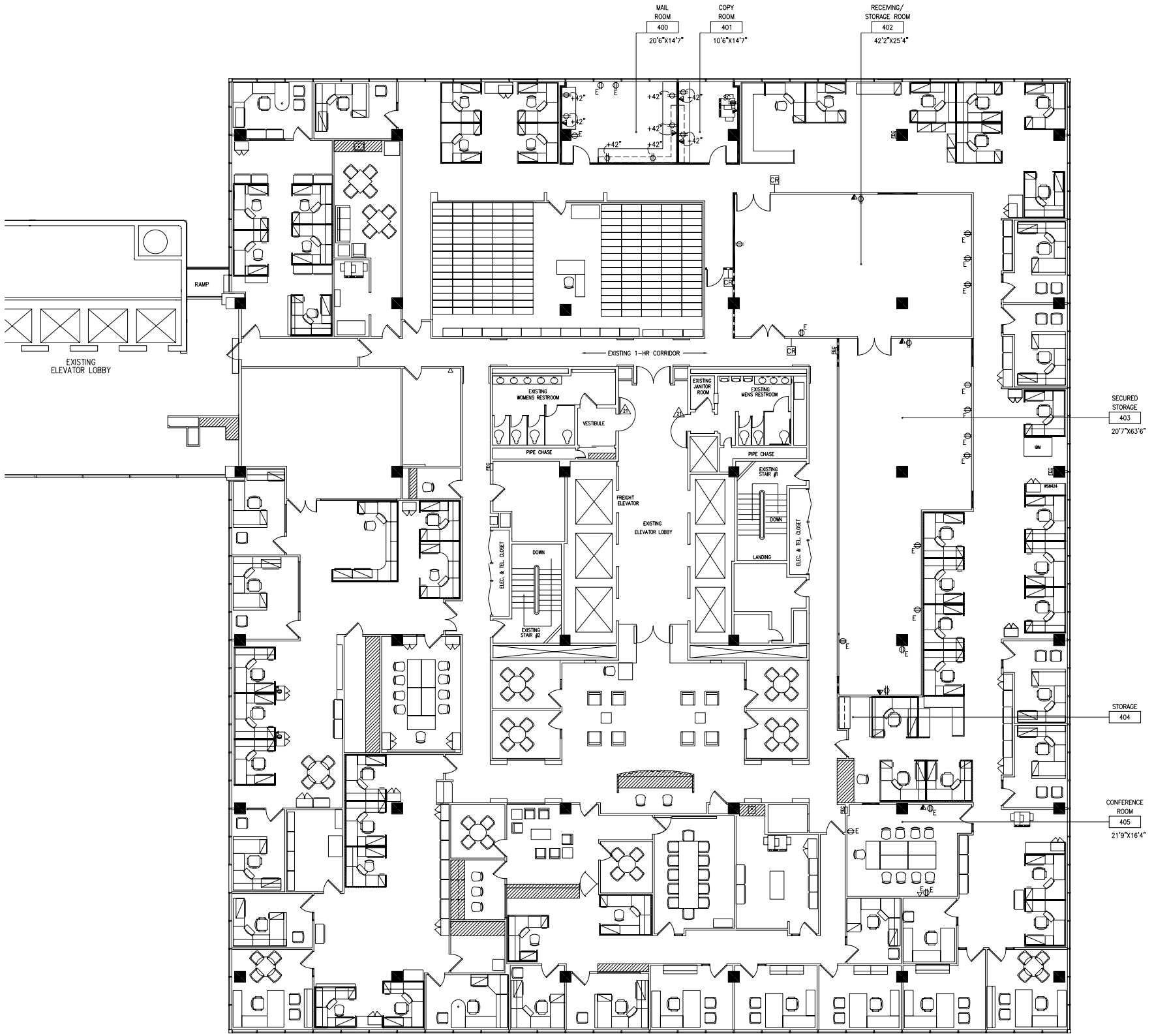

Power & Communication Plan Legend

Symbol	Description
	NEW BUILDING STANDARD 110 V. DUPLEX OUTLET– WALL MOUNTED @ 18" A.F.F. U.O.N * INDICATED OUTLET ON SWITCH.
	NEW BUILDING STANDARD 110 V. QUADRUPLEX OUTLET– WALL MOUNTED @ 18" A.F.F. U.O.N
	NEW BUILDING STANDARD COMBINATION TELEPHONE/DATA OUTLET– WALL MOUNTED @ 18" A.F.F. U.O.N. WITH 3/4" CONDUIT STUBBED TO 6" ABOVE LINE OF CEILING
	NEW BUILDING STANDARD TELEPHONE OUTLET @18" A.F.F. U.O.N. WITH 1" CONDUIT STUBBED 6" ABOVE CEILING WITH PULL WIRE, U.O.N.
	NEW BUILDING STANDARD DATA OUTLET @18" A.F.F. U.O.N. WITH 1" CONDUIT STUBBED 6" ABOVE CEILING WITH PULL WIRE, U.O.N.
SC	NEW BUILDING STANDARD 110 V./20 A. (U.O.N.) SEPARATE CIRCUIT OUTLET– WALL MOUNTED @ 18" A.F.F. U.O.N
	NEW BUILDING STANDARD TV. OUTLET @ 18" A.F.F.
	NEW BUILDING STANDARD FLOOR MOUNTED COMBINATION TELE/DATA/POWER OUTLET, FLUSH FLOOR INSTALLATION.
J 1	NEW BLDG. STD. WALL MOUNTED J-BOX @ +18" A.F.F. FOR ELECTRICAL POWER TO FEED FURNITURE SYSTEM. # INDICATES NUMBER OF WORKSTATIONS SERVED. 3 CIRCUIT – (2) CONVENIENCE (1) DEDICATED EACH WORKSTATION
1	NEW BLDG. STD. WALL MOUNTED J-BOX @ +18" A.F.F. FOR TELEPHONE DATA TO FEED FURNITURE SYSTEM. PROVIDE 1 1/2" CONDUIT STUBBED UP 6" ABOVE CEILING W/PULLWIRE # INDICATES NUMBER OF WORKSTATIONS SERVED.
J 1	NEW BLDG. STD. FLOOR MOUNTED J-BOX FOR ELECTRICAL POWER TO FEED FURNITURE SYSTEM. # INDICATES NUMBER OF WORKSTATIONS SERVED.
1	NEW BLDG. STD. FLOOR MOUNTED J-BOX FOR TELEPHONE DATA TO FEED FURNITURE SYSTEM. PROVIDE 1 1/2" CONDUIT STUBBED UP 6" ABOVE CEILING W/PULLWIRE # INDICATES NUMBER OF WORKSTATIONS SERVED.
CR	NEW ABOVE STD. CARD READER. G.C. TO PROVIDE J-BOX @36"W/CONDUIT STUBBED UP 6" INTO CEILING FOR TENANT SUPPLIED KEY PAD OR CARD READER.

NOTE FOR ALL: E=EXISTING TO REMAIN D=DEMO & PATCH WALL

SEE 18/D-1 FOR OUTLETS HEIGHTS

Power and Communication General Notes:

1. EXISTING TELE/ DATA/ POWER OUTLETS SHOWN ON THE PLAN ARE TO REMAIN THROUGHOUT SUITE U.O.N. IF EXISTING OUTLETS ARE LOCATED IN THE SAME WALL AND WITHIN 24" OF THOSE SHOWN ON THE PLAN, THEY MAY BE UTILIZED. REPLACE ANY BROKEN OUTLET COVER PLATES WITH NEW TO MATCH EXISTING. PROVIDE & INSTALL NEW BUILDING STANDARD TELEPHONE & ELECTRICAL OUTLETS AS NOTED ON PLAN. PROVIDE 1" CONDUIT STUB-UP 6" ABOVE CEILING W/PULL WIRE FOR ALL NEW COMMUNICATION OUTLETS. ELECTRICAL ENGINEERING IS TO BE DESIGN–BUILD BY GENERAL CONTRACTOR. TENANT TO PROVIDE TELEPHONE & COMPUTER CABLES TO CODE REQUIREMENTS. ALL ELECTRICAL/ PHONE/ DATA OUTLETS SHOWN ON PLAN ARE NEW U.O.N.
2. PROPOSED FIRE–LIFE–SAFETY SYSTEM TO COMPLY WITH CURRENT CODE REQUIREMENTS AS REQUIRED. F.L.S. TO BE DESIGN BUILD.
3. ALL MODIFICATIONS & ADDITIONS TO FIRE LIFE SAFETY SYSTEM SHALL BE DESIGN BUILD. FLS & ELECTRICAL SHALL ALSO BE DESIGN BUILD. UPGRADE EXISTING LIFE–SAFETY SYSTEM TO MEET CURRENT CODE REQUIREMENTS AS REQUIRED.
4. NO CORING TO BE DONE WITHOUT PRIOR NOTIFICATION & COORDINATION WITH THE OFFICE OF THE BUILDING. NO CORING THRU STRUCTURAL BEAMS.
5. ELECTRICAL ENGINEERING SHALL BE DESIGN BUILD.
6. ALL NEW OUTLETS AND COVER PLATES SHALL MATCH BUILDING STANDARD.
7. ALL OUTLETS SHOWN ADJACENT TO EACH OTHER SHALL BE 6" APART O.C., U.O.N.
8. ALL ELECTRICAL OUTLETS WITHIN 5'–0" OF A WATER SOURCE SHALL BE WITH G.F.I.
9. FURNITURE PROVIDED & INSTALLED BY TENANT, U.O.N.

Power & Communication Plan Key Notes:

SEE PLAN FOR LOCATION

E1 NOT USED.

Power and Communication Plan SCALE: 1/8"=1'–0"

Power and Communication Plan Notes and Legend

WWC OT
Widom Wein Cohen O'Leary Terasawa

3130 Wilshire Boulevard
Sixth Floor
Santa Monica, California 90403
T (310) 828-9040
F (310) 453-9432
www.wwcot.com

Inland Emptre
Palm Springs
Shanghai, China

Building Department Submittal: _____
Issued For Bid: _____
Issued For Construction: _____

Issued for Review & Approval: 06.19.07

State Bar of California 4th Floor-Remodel

1149 South Hill Street
4th Floor-Remodel
Los Angeles, Ca 90015

Project Number: 075026.00

Power and Communication Plan

Date: 05-14-07
Drawn By: DM
Checked By: BL

A-4
Sheet No.

File Path & Name: F:\PROJECTS\075026-00\A-CD\SHEETS\A-4.DWG
© WWCOT 2007 Jul 11, 2007 - 02:41 pm

Attachmentt A

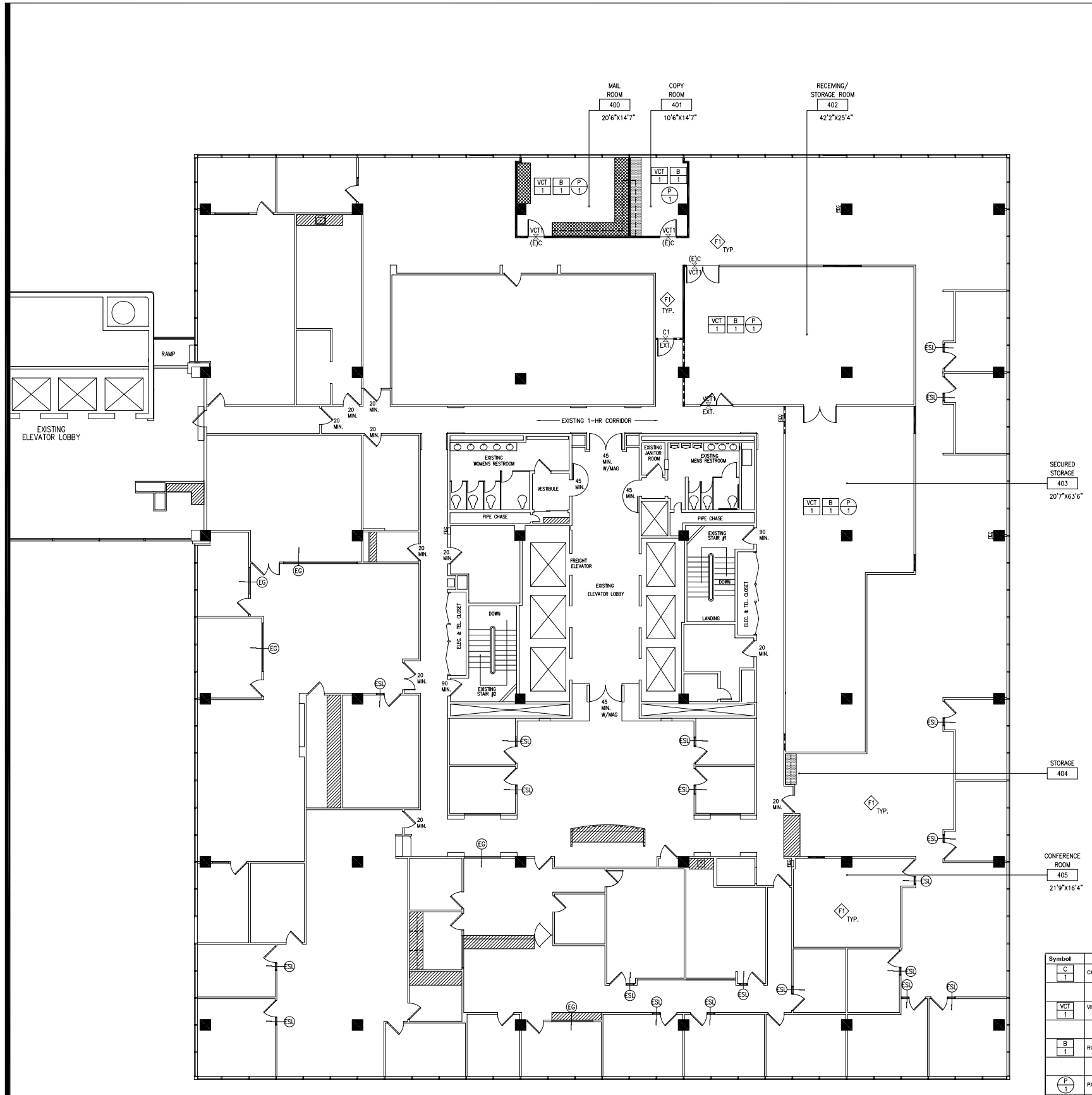

Finish Plan General Notes:

1. PREPARE EXISTING FLOORING AND PARTITIONS AS REQUIRED TO RECEIVE NEW FINISHES.
2. **FLOORING:** EXISTING FLOORING & RUBBER BASE ARE TO BE REMOVED THRU-OUT SUITE U.O.N. PROVIDE AND INSTALL NEW BUILDING STANDARD CARPET OVER PAD AND 4" RUBBER BASE THRU-OUT SUITE U.O.N. PROVIDE AND INSTALL NEW BUILDING STANDARD VCT FLOORING AND 4" RUBBER BASE IN COPY/FAX ROOM & LOUNGE ROOM. EXISTING WOOD FLOORING & WOOD BASE ARE TO REMAIN THRU-OUT SUITE U.O.N.
3. **WALLS:** PAINT ALL NEW AND EXISTING PAINTED PARTITIONS THROUGHOUT SUITE WITH BUILDING STANDARD PAINT (U.O.N.) EXISTING WALLCOVERING IS TO REMAIN THROUGHOUT SUITE (U.O.N.) PATCH/ REPAIR AS REQUIRED.
4. **DOORS:** LIGHTLY SAND EXISTING DOORS & REFINISH TO MATCH EXISTING. PAINT ALL FRAMES TO MATCH EXISTING.
5. PROPOSED NEW CABINETRY TO BE BUILDING STANDARD WITH PLASTIC LAMINATE ALL EXPOSED SURFACES U.O.N.
6. SEE FINISH LEGEND BELOW FOR FINISH SPECIFICATIONS.
   SEE FINISH PLAN FOR FINISHES LOCATION.
   SEE MILLWORK DETAILS FOR ADDITIONAL FINISHES INFORMATION
7. PROVIDE SAMPLES OF ALL FINISHES TO TENANT PRIOR TO ORDERING FOR APPROVAL.

Finish Plan Key Notes:

SEE PLAN FOR LOCATION

F1 PATCH (E) CARPET & BASE THRU-OUT REMODEL AREAS TO MATCH EXISTING. PAINT TO MATCH EXISTING.

C1 / VCT1 FLOOR TRANSITION VCT-CARPET SEE 16/D-1

Symbol	Material	MFG.	Pattern/Style	Color	Size	Finish	Misc.
C 1	CARPET	TO MATCH EXISTING					
VCT 1	VINYL COMP. TILE	T.B.D.					
B 1	RUBBER BASE	TO MATCH EXISTING					USE STRAIGHT AT CARPET FLOORING, USE COVED AT VCT AND CONCRETE FLOORING
P 1	PAINT	TO MATCH EXISTING				FLAT	
PL 1	PLASTIC LAMINATE	T.B.D.					VERTICAL SURFACES
PL 1	PLASTIC LAMINATE	T.B.D.					HORIZONTAL SURFACES

Finish Plan SCALE: 1/8"=1'-0"

Finish Plan Legend and General Notes.

WWC OT
Widom Wein Cohen O'Leary Terasawa

3130 Wilshire Boulevard
Sixth Floor
Santa Monica, California 90403
T (310) 828-9040
F (310) 453-9432
www.wwcot.com

Inland Emptre
Palm Springs
Shanghai, China

Building Department Submittal: _____
Issued For Bid: _____
Issued For Construction: _____

Issued for Review & Approval: 06.19.07

State Bar of California 4th Floor-Remodel

1149 South Hill Street
4th Floor-Remodel
Los Angeles, Ca 90015

Project Number: 075026.00

Finish Plan

Date: 05-14-07
Drawn By: DM
Checked By: BL

A-5
Sheet No.

File Path & Name: F:\PROJECTS\075026-00\A-CD\SHEETS\A-5.DWG
© WWCOT 2007 Jul 11, 2007 - 02:41 pm

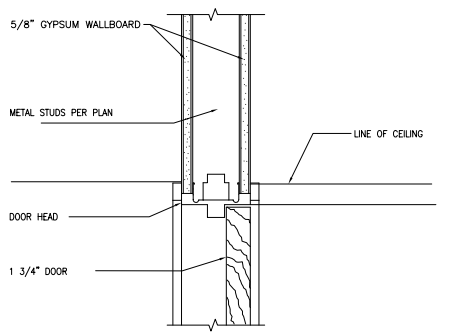

D-1.dwg

Door Head — Scale 3"=1'-0" — 20

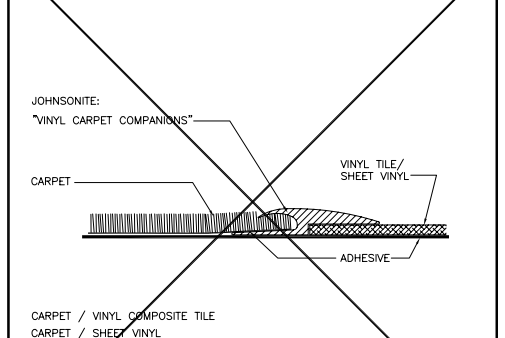

D-1.dwg

Floor Transition — Scale N.T.S. — 16

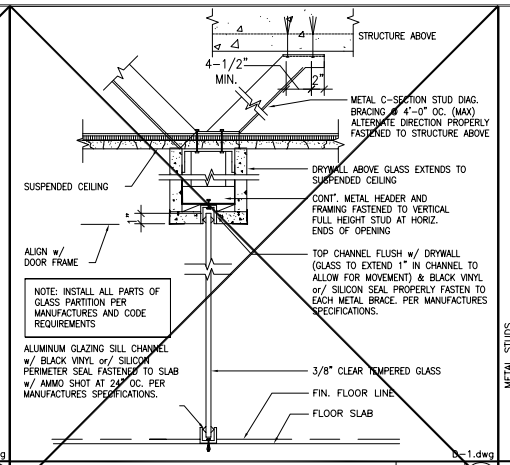

D-1.dwg

Frameless Glass Partition / Sidelite — Scale N.T.S. — 12

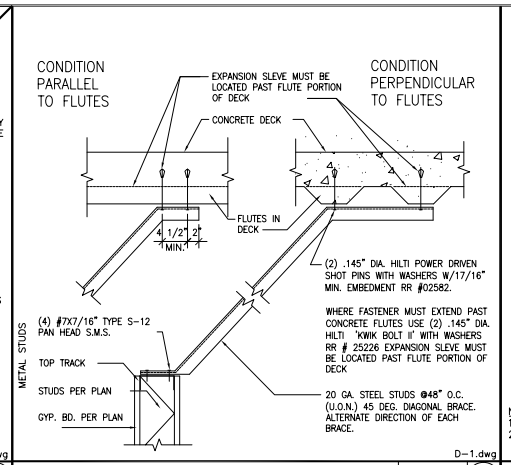

D-1.dwg

Brace Connection at Deck — Scale N.T.S. — 8

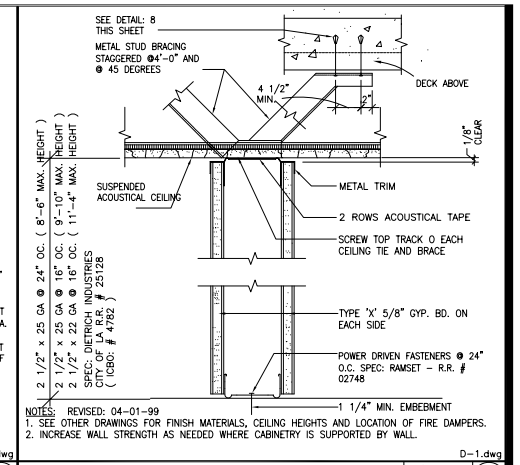

NOTES: REVISED: 04-01-99
1. SEE OTHER DRAWINGS FOR FINISH MATERIALS, CEILING HEIGHTS AND LOCATION OF FIRE DAMPERS.
2. INCREASE WALL STRENGTH AS NEEDED WHERE CABINETRY IS SUPPORTED BY WALL.

D-1.dwg

Ceiling Height Partition — Scale 3"=1'-0" — 4

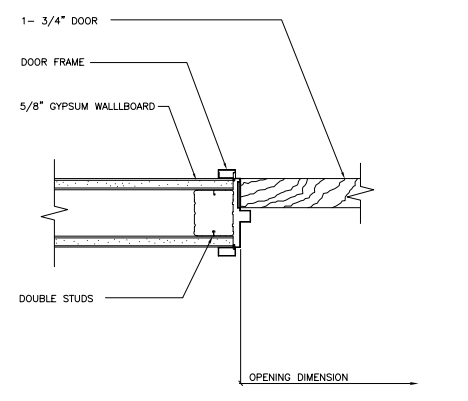

D-1.dwg

Door Jamb — Scale 3"=1'-0" — 19

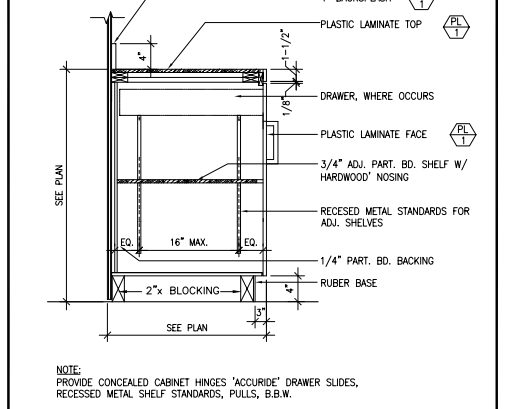

NOTE:
PROVIDE CONCEALED CABINET HINGES "ACCURIDE" DRAWER SLIDES, RECESSED METAL SHELF STANDARDS, PULLS, B.B.W.

D-1.dwg

Cabinet Section — Scale N.T.S. — 15

NOTES:
1. LATERAL SUPPORT SHALL BE PROVIDED BY (4) WIRES (12 GA. MIN.) SPLAYED IN FOUR DIRECTIONS 90° APART. CONNECT TO MAIN RUNNER @ 6" MAX. FROM CROSS-RUNNER AND TO STRUCTURE ABOVE AT AN ANGLE NOT EXCEEDING 45° FROM PLANE OF CEILING. INSTALL LATERAL SUPPORTS @ 12'-0" INTERVALS EA. DIRECTION W/FIRST POINT @ 6"-0" MAX. FROM EA. WALL.
2. VERTICAL SUPPORT SHALL BE PROVIDED AS REQUIRED IN CHAPTER 25 SECTION 2504 UNIFORM BUILDING CODE, WITH THE ADDED REQUIREMENT THAT DISCONTINUOUS ENDS OF CROSS-RUNNERS AND MAIN RUNNERS SHALL BE VERTICALLY SUPPORTED @ 8" MAX. FROM SUCH DISCONTINUITIES WHICH OCCUR WHERE CEILING IS DISRUPTED BY A WALL.
3. PROVIDE 1 1/8" X 1 1/2" X 20 GA. ANGLE AT END OF EACH STUD TO CHANNEL WITH 2 #10 S.M.S.

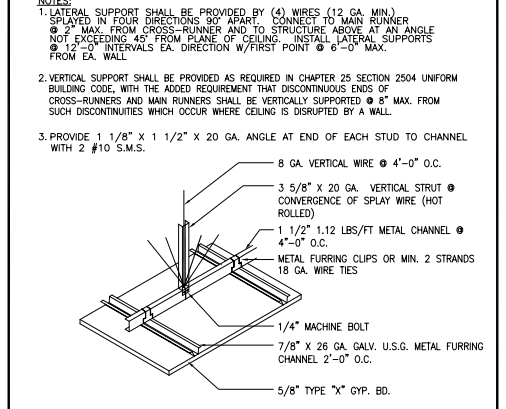

SUSPENDED GYPSUM BOARD CEILING DETAIL

D-1.dwg

Drywall Ceiling Framing — Scale N.T.S. — 11

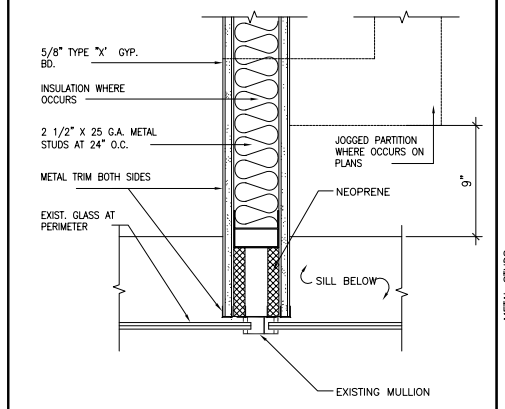

D-1.dwg

Partition at Mullion — Scale 3"=1'-0" — 7

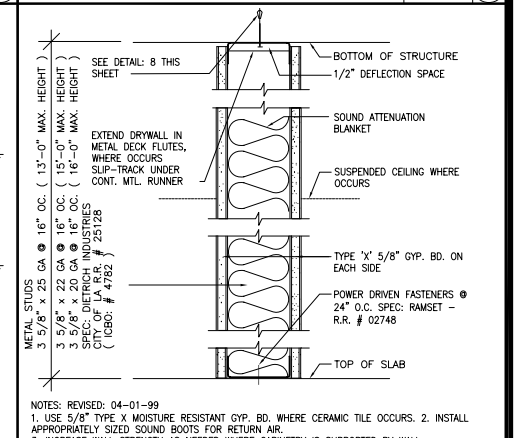

NOTES: REVISED: 04-01-99
1. USE 5/8" TYPE X MOISTURE RESISTANT GYP. BD. WHERE CERAMIC TILE OCCURS. 2. INSTALL APPROPRIATELY SIZED SOUND BOOTS FOR RETURN AIR.
3. INCREASE WALL STRENGTH AS NEEDED WHERE CABINETRY IS SUPPORTED BY WALL.

D-1.dwg

Demising Partition — Scale 3"=1'-0" — 3

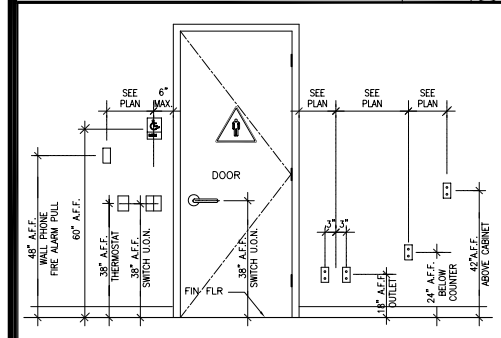

NOTE:
1. ALL DIMENSIONS ARE TO CENTER LINE OF FACE PLATE
2. THIS DETAIL IS TO SHOW MINIMUM AND MAXIMUM ALLOWABLE HEIGHTS. SEE INTERIOR ELEVATIONS FOR ANY ADDITIONAL INFORMATION AND DIMENSIONS.
3. PROVIDE HANDICAP SYMBOL.PROVIDE NAME RAISED LETTERS AT 1/32" HIGH, TYPE II BRAILLE.

D-1.dwg

Power/Communic./Sign. & Switch Heights — Scale N.T.S. — 18

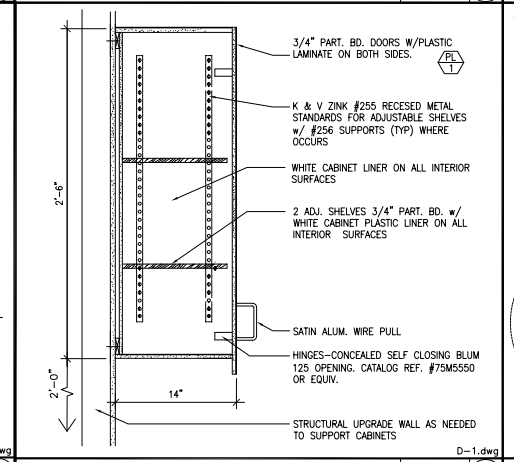

D-1.dwg

Upper Cabinet Section — Scale N.T.S. — 14

TYPICAL CEILING SUSPENSION SYSTEM
RCA 4-74 W/APPROVED CEILING PER I.C.B.O. #22501
NOTE:
TIE TWO ADJACENT WALL TO CEILING MAIN & CROSS RUNNERS

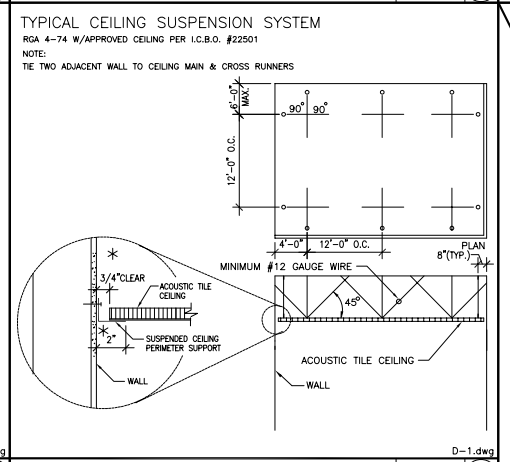

D-1.dwg

Acoustic Tile Ceiling — Scale N.T.S. — 10

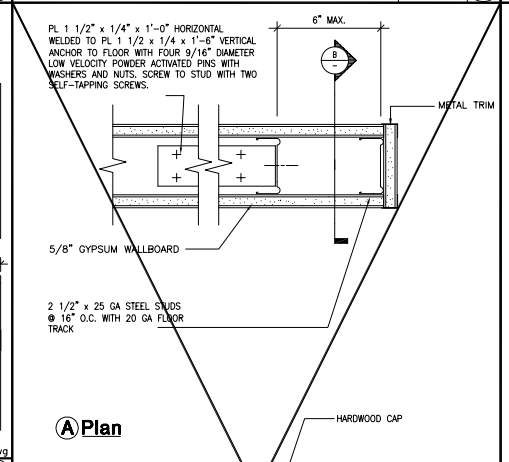

D-1.dwg

Low Wall Plan / Section — Scale 3"=1'-0" — 5

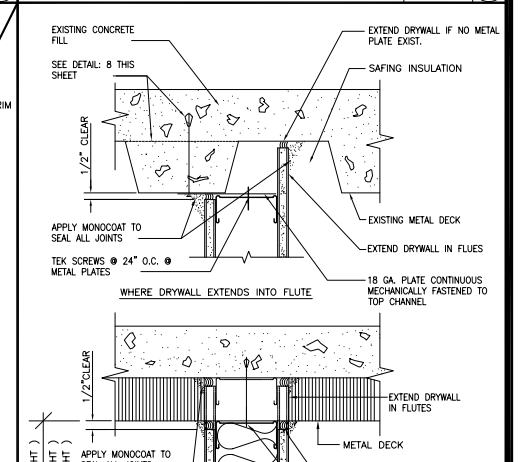

NOTES:
1. SEE OTHER DRAWINGS FOR STUD SIZES AND SPACING, FINISH MATERIALS, CEILING HEIGHTS AND LOCATIONS OF FIRE DAMPERS.
2. UL DESIGN #U410
3. WHERE RETURN AIR OPENINGS ARE REQUIRED IN PARTITION, INSTALL APPROPRIATELY SOUND BOOTS.
4. ALL PENETRATIONS SHALL BE FIRE-DAMPERED. 5. INCREASE WALL STRENGTH AS NEEDED WHERE CABINETRY IS SUPPORTED BY WALL.

REVISED: 04-01-99

D-1.dwg

1-Hour Partition — Scale 3"=1'-0" — 1

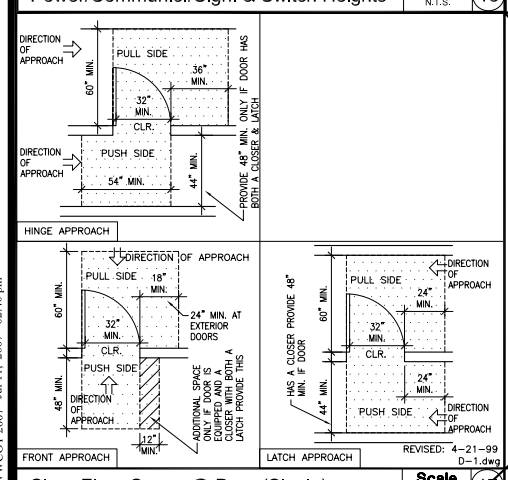

D-1.dwg

Clear Floor Space @ Door (Single) — Scale N.T.S. — 17

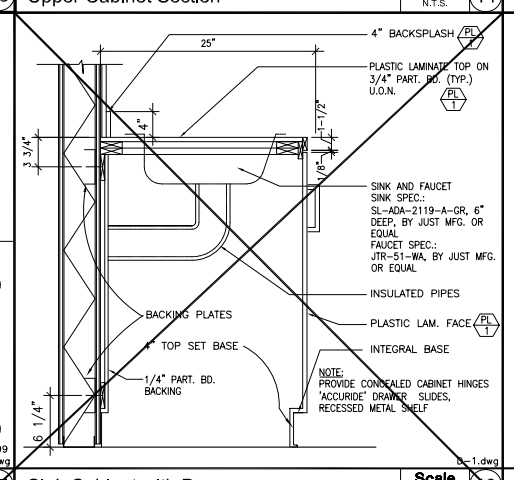

D-1.dwg

Sink Cabinet with Doors — Scale N.T.S. — 13

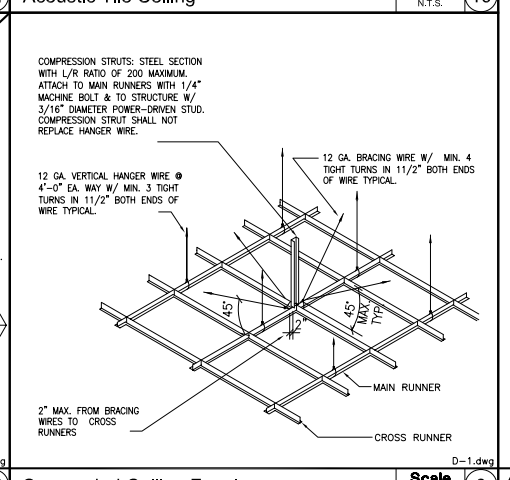

D-1.dwg

Suspended Ceiling Framing — Scale N.T.S. — 9

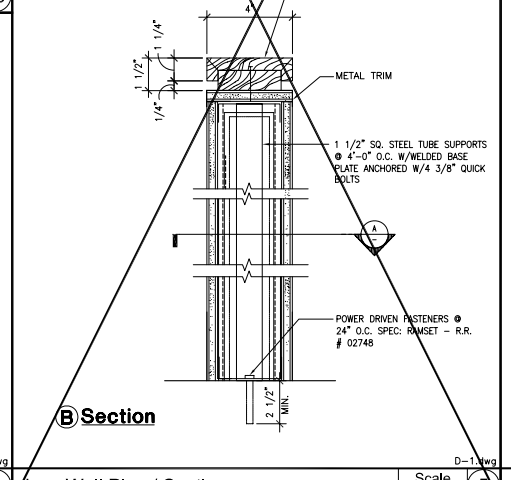

D-1.dwg

Partition at Mullion — Scale 3"=1'-0" — 7

WWC OT
Widom Wein Cohen O'Leary Terasawa

3130 Wilshire Boulevard
Sixth Floor
Santa Monica, California 90403
T (310) 828-9040
F (310) 453-9432
www.wwcot.com

Inland Empire
Palm Springs
Shanghai, China

Building Department Submittal: _____
Issued For Bid: _____
Issued For Construction: _____

Issued for Review & Approval:
06.19.07

State Bar of California 4th Floor-Remodel

1149 South Hill Street
4th Floor-Remodel
Los Angeles, Ca 90015

Project Number: 075026.00

Details

Date: 05-14-07
Drawn By: DM
Checked By: BL

D-1
Sheet No.

Attachmentt A

File Path & Name: F:\PROJECTS\075026-00\A-CD\SHEETS\D-1.DWG
© WWCOT 2007 Jul 11, 2007 - 02:40 pm

Attachmentt A

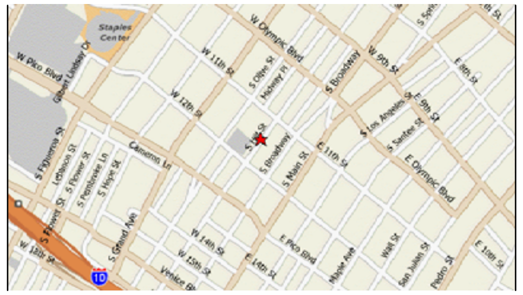

Vicinity Map Scale N.T.S.

State Bar of California

"Suite Remodel"

1149 S. Hill Street, 4th Floor, Los Angeles, Ca 90015

Project Title

PROJECT: State Bar of California–4th Floor Remodel Interior Tenant Improvement

LOCATION: 1149 S. Hill Street, 4th Floor Los Angeles, Ca 90015

BUILDING CODE: CBC, 2001 EDITION
CONSTRUCTION: TYPE I, SPRINKLERED
OCCUPANCY: B – OFFICE USE
NO. OF STORIES: 10 TENANT STORIES
SCOPE OF WORK: SUITE # 400: 25,509 U.S.F. TOTAL APPROX.
REMODEL AREA: 3,859 U.S.F. APPROX.

Building Analysis

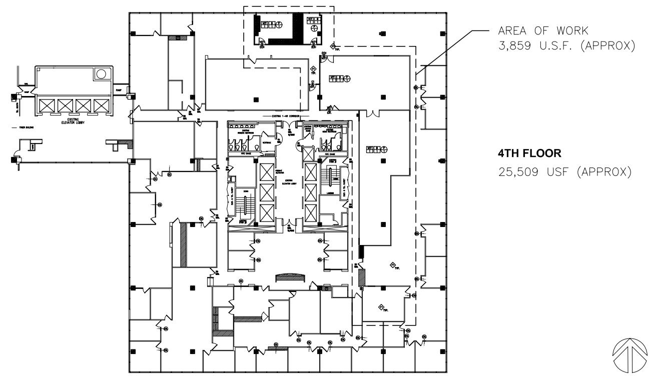

Site Key Plan Scale N.T.S.

@	AT	N.	NORTH
AL./ALUM.	ALUMINUM	N.I.C.	NOT IN CONTRACT
A.F.F.	ABOVE FINISH FLOOR	N.T.S.	NOT TO SCALE
BLDG.	BUILDING	PLAS.	PLASTER
℄	CENTERLINE	REV.	REVISION
CER.	CERAMIC	S.	SOUTH
CLR.	CLEAR DIMENSIONS	SH.	SHELF
CONC.	CONCRETE	SIM.	SIMILAR
CONT.	CONTINUOUS	TYP.	TYPICAL
CORR.	CORRIDOR	U.O.N.	UNLESS OTHERWISE NOTED
CONTR.	CONTRACTOR	VCT.	VINYL COMPOSITION TILE
CPT.	CARPET	W.	WEST
DIM.	DIMENSION	W/	WITH
DISP.	DISPENSER	W/C	WALL COVERING
DN.	DOWN		
E.	EAST		
EA.	EACH		
EL.	ELEVATION		
EXIST.	EXISTING		
F.E.C.	FIRE EXTINGUISHER CAB.		
FIXT.	FIXTURE		
FLUOR.	FLUORESCENT		
F.O.S.	FACE OF STUDS		
F.O.W.	FACE OF WALL		
FUT.	FUTURE		
GL.	GLASS OR GLAZING		
GYP. BD.	GYPSUM BOARD		
HDWE.	HARDWARE		
H.C.	HANDICAPPED		
HR.	HOUR		
MFR.	MANUFACTURER		

Abbreviations

STARTING POINT OR DATUM POINT
SECTION
SECTION IDENTIFICATION
SHEET WHERE SECTION IS DRAWN
DOOR NUMBER
DOOR TYPE
INTERIOR ELEVATION
GROUP NUMBER
SHEET WHERE ELEVATION IS LOCATED
201 ROOM NUMBER
DETAIL
DETAIL IDENTIFICATION
SHEET WHERE DETAIL IS DRAWN
REVISION NUMBER
ALIGN FINISH SURFACES
CENTERLINE

Symbols

ELECTRICAL ENGINEER
DESIGN BUILD

MECHANICAL ENGINEER
DESIGN BUILD

FIRE–LIFE SAFETY
DESIGN BUILD

Consultants

ARCHITECTURAL DRAWING LIST

T–1 TITLE SHEET
A–1 DEMOLITION PLAN
A–2 CONSTRUCTION PLAN
A–3 REFLECTED CEILING PLAN
A–4 POWER & COMMUNICATIONS PLAN
A–5 FINISH PLAN
D–1 DETAILS

Sheet Index

A. APPLICABLE CODES:

ALL WORK ON THIS PROJECT SHALL COMPLY WITH ALL GOVERNING AGENCIES APPLICABLE CODES, ORDINANCES AND THEIR AMENDMENTS. THE CODES IN EFFECT ARE THE 2001 EDITION OF THE: CMC, CPC, CFC, CBC, & CEC AND THE STATE TITLE–24 CODE. SECTION AND NUMBERS NOTED IN PARENTHESIS REFER TO BUILDING CODE SECTIONS AND CHAPTER NUMBERS.

B. GENERAL NOTES:

1. THE CONTRACTOR SHALL CAREFULLY STUDY AND COMPARE THE CONTRACT DOCUMENTS WITH EACH OTHER AND WITH INFORMATION FURNISHED BY THE OWNER AND SHALL AT ONCE REPORT TO WWCOT ERRORS, INCONSISTENCIES OR OMISSIONS DISCOVERED. IF THE CONTRACTOR PERFORMS ANY CONSTRUCTION ACTIVITY KNOWING IT INVOLVES A RECOGNIZED ERROR, WITHOUT SUCH NOTICE TO WWCOT, THE CONTRACTOR SHALL ASSUME APPROPRIATE RESPONSIBILITY FOR SUCH PERFORMANCE AND SHALL BEAR AN APPROPRIATE AMOUNT OF THE ATTRIBUTABLE COSTS FOR CORRECTION.
2. THE CONTRACTOR SHALL TAKE FIELD MEASUREMENTS AND VERIFY FIELD CONDITIONS AND SHALL CAREFULLY COMPARE SUCH FIELD MEASUREMENTS AND CONDITIONS AND OTHER INFORMATION KNOWN TO THE CONTRACTOR WITH THE CONTRACT DOCUMENTS BEFORE COMMENCING ACTIVITIES. ERRORS, INCONSISTENCIES OR OMISSIONS DISCOVERED SHALL BE REPORTED TO WWCOT AT ONCE.
3. THE CONTRACTOR SHALL SUPERVISE AND DIRECT THE WORK, USING THE CONTRACTOR'S BEST SKILL AND ATTENTION. THE CONTRACTOR SHALL BE SOLELY RESPONSIBLE FOR AND HAVE CONTROL OVER CONSTRUCTION MEANS, METHODS, TECHNIQUES, SEQUENCES AND PROCEDURES, INCLUDING SAFETY PROCEDURES, AND FOR COORDINATING ALL PORTIONS OF THE WORK UNDER THE CONTRACT, UNLESS CONTRACT DOCUMENTS GIVE OTHER SPECIFIC INSTRUCTIONS CONCERNING THESE MATTERS.
4. THE CONTRACTOR SHALL BE RESPONSIBLE TO THE OWNER FOR ACTS AND OMISSIONS OF THE CONTRACTOR'S EMPLOYEES, SUBCONTRACTORS AND THEIR AGENTS AND EMPLOYEES, AND OTHER PERSONS PERFORMING PORTIONS OF THE WORK UNDER A CONTRACT WITH THE CONTRACTOR.
5. THE CONTRACTOR SHALL BE RESPONSIBLE FOR INSPECTION OF PORTIONS OF WORK ALREADY PERFORMED UNDER THIS CONTRACT TO DETERMINE THAT SUCH PORTIONS ARE IN PROPER CONDITION TO RECEIVE SUBSEQUENT WORK. CORRECT CONDITIONS DETRIMENTAL TO TIMELY AND PROPER COMPLETION OF THE WORK. DO NOT PROCEED UNTIL UNSATISFACTORY CONDITIONS ARE CORRECTED. COMMENCEMENT OF WORK BY ANY TRADE WILL BE CONSIDERED UNQUALIFIED ACCEPTANCE OF THE SUBSTRATE AND INSTALLATION CONDITIONS. NO CLAIM FOR WARRANTY VOIDANCE WILL BE ACCEPTED IF INSTALLATION OVER AN IMPROPER SUBSTRATE HAS COMMENCED.
6. UNLESS OTHERWISE PROVIDED IN THE CONTRACT DOCUMENTS, THE CONTRACTOR SHALL PROVIDE AND PAY FOR LABOR, MATERIALS, EQUIPMENT, TOOLS, CONSTRUCTION EQUIPMENT AND MACHINERY, WATER, HEAT, UTILITIES, TRANSPORTATION, AND OTHER FACILITIES AND SERVICES NECESSARY FOR PROPER EXECUTION AND COMPLETION OF THE WORK, WHETHER TEMPORARY OR PERMANENT AND WHETHER OR NOT INCORPORATED OR TO BE INCORPORATED IN THE WORK.
7. UNLESS OTHERWISE PROVIDED IN THE CONTRACT DOCUMENTS, THE CONTRACTOR SHALL SECURE AND PAY FOR THE BUILDING PERMIT AND OTHER PERMITS AND GOVERNMENTAL FEES, LICENSES AND INSPECTIONS NECESSARY FOR PROPER EXECUTION AND COMPLETION OF THE WORK, INCLUDING CERTIFICATE OF OCCUPANCY, WHICH ARE CUSTOMARILY SECURED AFTER EXECUTION OF THE CONTRACT AND WHICH ARE LEGALLY REQUIRED WHEN BIDS ARE RECEIVED OR NEGOTIATIONS CONCLUDED.

7A. SEPARATE INDIVIDUAL BUILDING PERMITS ARE REQUIRED FOR ALL PLUMBING, MECHANICAL AND ELECTRICAL WORK.
8. THE CONTRACTOR SHALL COMPLY WITH AND GIVE NOTICES REQUIRED BY LAWS, ORDINANCES, RULES, REGULATIONS AND LAWFUL ORDERS OF PUBLIC AUTHORITIES BEARING ON PERFORMANCE OF THE WORK.
9. IT IS NOT THE CONTRACTOR'S RESPONSIBILITY TO ASCERTAIN THAT THE CONTRACT DOCUMENTS ARE IN ACCORDANCE WITH APPLICABLE LAWS, STATUTES, ORDINANCES, BUILDING CODES, AND RULES AND REGULATIONS. HOWEVER, IF THE CONTRACTOR OBSERVES THAT PORTIONS OF THE CONTRACT DOCUMENTS ARE AT VARIANCE THEREWITH, THE CONTRACTOR SHALL PROMPTLY NOTIFY WWCOT IN WRITING, AND NECESSARY CHANGES SHALL BE ACCOMPLISHED BY APPROPRIATE MODIFICATION.
10. THE CONTRACTOR SHALL BE RESPONSIBLE FOR CUTTING, FITTING OR PATCHING AS REQUIRED TO COMPLETE THE WORK OR TO MAKE ITS PARTS FIT TOGETHER PROPERLY; THE REFINISHED SURFACES SHALL MATCH THE ADJACENT SURFACES.
11. THE CONTRACTOR SHALL NOT DAMAGE OR ENDANGER ANY PORTION OF FULLY OR PARTIALLY COMPLETED CONSTRUCTION OF THE OWNER OR SEPARATE CONTRACTORS BY CUTTING, PATCHING OR OTHERWISE ALTERING SUCH CONSTRUCTION.
12. THE CONTRACTOR SHALL KEEP THE PREMISES AND SURROUNDING AREA FREE FROM ACCUMULATION OF WASTE MATERIALS CAUSED BY OPERATIONS UNDER THE CONTRACT. AT COMPLETION OF THE WORK, THE CONTRACTOR SHALL REMOVE FROM AND ABOUT THE PROJECT WASTE MATERIALS, RUBBISH, CONTRACTOR'S TOOLS, CONSTRUCTION EQUIPMENT, MACHINERY AND SURPLUS MATERIALS.
13. THE CONTRACTOR SHALL NOT BE RELIEVED OF RESPONSIBILITY FOR DEVIATIONS FROM REQUIREMENTS OF THE CONTRACT DOCUMENTS BY WWCOT'S REVIEW OF SHOP DRAWINGS, PRODUCT DATA, SAMPLES OR SIMILAR SUBMITTALS UNLESS THE CONTRACTOR HAS SPECIFICALLY INFORMED AND OBTAINED WRITTEN APPROVAL FROM WWCOT. THE CONTRACTOR SHALL NOT BE RELIEVED OF RESPONSIBILITY FOR ERRORS OR OMISSIONS IN SHOP DRAWINGS, PRODUCT DATA, SAMPLES OR SIMILAR SUBMITTALS BY WWCOT REVIEW THEREOF. THE CONTRACTOR SHALL BE SOLELY RESPONSIBLE FOR PROVIDING A COMPLETE INSTALLATION OF ELEMENTS WHETHER OR NOT THE SHOP DRAWINGS HAVE BEEN REVIEWED BY WWCOT.
14. CONTRACTOR SHALL SUBMIT 1 PAPER SEPIA AND 1 PRINT OF REQUIRED SHOP DRAWINGS FOR REVIEW OF CONCEPTUAL DESIGN BY WWCOT PRIOR TO EXECUTION OF WORK.
15. ALL AREAS TO RECEIVE MILLWORK SHALL BE FIELD MEASURED PRIOR TO CONSTRUCTION.
16. ALL CABINET WORK SHALL CONFORM TO THE APPLICABLE REQUIREMENTS OF THE WOODWORK INSTITUTE OF CALIFORNIA AND THE LATEST EDITION OF THE "W.I.C. MANUAL OF MILLWORK", PREMIUM GRADE.
17. HORIZONTAL DIMENSIONS ARE TO FINISH FACE OF WALL OR FACE OF CONCRETE UNLESS OTHERWISE NOTED.
18. VERTICAL DIMENSIONS AND ELEVATIONS ARE TO FINISH MATERIALS UNLESS NOTED OTHERWISE.
19. CONTRACTOR SHALL PROVIDE A COMPLETE PARTITION LAYOUT CHALKED IN FIELD FOR REVIEW BY WWCOT PRIOR TO ANY CONSTRUCTION.
20. CONTRACTOR SHALL VERIFY EQUIPMENT ROUGH–IN REQUIREMENTS WITH THE EQUIPMENT MANUFACTURERS.
21. THE CONTRACTOR SHALL PROVIDE ALL NECESSARY BLOCKING, BACKING, FRAMING, HANGERS OR OTHER SUPPORT FOR ALL FIXTURES, EQUIPMENT, CABINETRY, FURNISHINGS AND ALL OTHER ITEMS.
22. NOTIFY OWNER OF NON–AVAILABILITY OF SPECIFIED MATERIALS AT THE TIME OF BIDDING. IF NO NOTIFICATION IS GIVEN, IT WILL BE ASSUMED THAT MATERIALS ARE AVAILABLE.
23. SUBSTITUTIONS OF SPECIFIED PRODUCTS WILL REQUIRE WRITTEN APPROVAL BY WWCOT PRIOR TO ORDERING OR INSTALLATION.
24. DO NOT SCALE THE DRAWINGS.
25. PROTECT FINISH MATERIALS AGAINST DAMAGE.

C. EXITS, STAIRS AND OCCUPANT LOADS:

1. EXIT DOORS SHALL SWING IN THE DIRECTION OF EXIT WHEN SERVING AN OCCUPANT LOAD OF 50 OR MORE (SEC. 1003.3.1.5) OVER A LANDING NOT MORE THAN 1/2" BELOW THE THRESHOLD (SEC. 1003.3.1.6).
2. EXIT WAYS SHALL BE ILLUMINATED BY AN APPROVED EMERGENCY LIGHTING SYSTEM DESIGNED TO OPERATE WHEN THE POWER SOURCE IS INTERRUPTED IN ALL EXIT CORRIDORS, PUBLIC HALLWAYS OR OTHER REQUIRED EXITS AS REQUIRED BY THE ELECTRICAL CODE (SEC. 1003.2.9.2).
3. WHERE EXIT SIGNS ARE REQUIRED BY SECTION 1003.2.8.2, PROVIDE APPROVED AND LISTED, INTERNALLY, EXTERNALLY OR SELF–ILLUMINATED LOW–LEVEL EXIT SIGNS COMPLYING WITH SECTION 1003.2.8.2. THE BOTTOM OF THE SIGN SHALL BE NOT LESS THAN 6" NOR MORE THAN 8" ABOVE THE FLOOR LEVEL. FOR EXITWAY DOORS, THE SIGN SHALL BE ON THE DOOR WITH THE CLOSEST EDGE OF THE SIGN WITHIN 4" OF THE DOOR FRAME OR ADJACENT TO THE DOOR. SUCH SIGNS SHALL BE OF A TYPE WHICH IS PERCEPTIBLE TO THE SENSE OF TOUCH (SEC. 1003.2.8.3).
4. ALL MANUALLY OPERATED EDGE OR SURFACE–MOUNTED FLUSH BOLTS IN PAIRS AND APPROVED AUTOMATIC FLUSH BOLTS ARE USED. THE DOOR LEAF HAVING THE AUTOMATIC FLUSH BOLTS SHALL HAVE NO DOOR KNOB OR SURFACE–MOUNTED HARDWARE. THE UNLATCHING OF ANY LEAF SHALL NOT REQUIRE MORE THAN ONE OPERATION.
5. FOR GROUP A OCCUPANCY, WHERE EXIT SIGNS ARE REQUIRED BY SECTION 1003.2.8.2, PROVIDE ALL EXIT CORRIDORS WITH CONTINUOUS LOW–LEVEL EXIT PATH MARKING. INSTALL APPROVED AND LISTED INTERNALLY OR SELF–ILLUMINATED MARKING AT FLOOR LEVEL OR NO HIGHER THAN 8" ABOVE THE FLOOR LEVEL. SUCH MARKING SHALL BE OF A TYPE WHICH IS PERCEPTIBLE TO THE SENSE OF TOUCH (SEC. 1007.2.8).
6. THE CONTRACTOR SHALL UNDERCUT ALL NEW AND EXISTING DOORS 1/4" ABOVE THE TOP OF FLOOR COVERING. VERIFY EXACT THICKNESS OF ALL NEW FLOOR COVERINGS WITH WWCOT PRIOR TO UNDERCUTTING OF DOORS.
7. STANDARD MINIMUM DISTANCE BETWEEN DOOR JAMB AND WALL PERPENDICULAR AND ADJACENT TO DOOR OPENINGS TO BE 5" UNLESS OTHERWISE NOTED.
8. PROVIDE FIRE RATED ASSEMBLY CORRIDOR DOORS WHERE OCCURS (THRESHOLD, DOOR GASKETING AT THE HEADS AND JAMBS EQUAL TO PEMKO S88 SILICONSEAL, ETC.).

D. INTERIOR CONSTRUCTION:

1. INTERIOR NONLOAD–BEARING PARTITIONS DIVIDING PORTIONS OF STORES, OFFICES OR SIMILAR PLACES OCCUPIED BY ONE TENANT ONLY AND WHICH DO NOT ESTABLISH A CORRIDOR SERVING AN OCCUPANT LOAD OF 30 OR MORE MAY BE CONSTRUCTED OF:
   a. NONCOMBUSTIBLE MATERIALS.
   b. FIRE–RETARDANT TREATED WOOD.
   c. ONE–HOUR FIRE–RESISTIVE CONSTRUCTION.
   d. WOOD PANELS OR SIMILAR LIGHT CONSTRUCTION UP TO THREE–FOURTHS THE HEIGHT OF THE ROOM IN WHICH PLACED; WHEN MORE THAN THREE–FOURTHS THE HEIGHT OF THE ROOM, SUCH PARTITIONS SHALL HAVE NOT LESS THAN THE UPPER ONE–FOURTH OF THE PARTITION CONSTRUCTED OF GLASS. (SEC 91.1705 (b)1)
2. GYPSUM WALLBOARD SHALL BE 5/8" THICK, TYPE "X" AND SHALL CONFORM TO U.B.C. STANDARD 47–11 (SEC.4711 (c)). PROVIDE MARLITE OR WATER RESISTANT GYPSUM WALLBOARD FOR TOILET ROOM WALLS THAT ARE TO BE COVERED WITH TILE. DO NOT USE WATER RESISTANT GYPSUM WALLBOARD FOR CEILINGS OR WALLS THAT ARE TO BE PAINTED.
3. PREPARE FLOORS FOR INSTALLATION OF CARPET AND/OR VINYL COMPOSITION TILE. INCLUDE COST OF FLOOR PREPARATION IN FLOOR COVERING BID.
4. PROVIDE SUSPENDED CEILINGS OR FURRED OUT SURFACES WHERE REQUIRED TO CONCEAL PIPING, DUCTS, ETC. IN FINISHED ROOMS. IF CONDITIONS REQUIRE ALTERATIONS AT INDICATED CEILING HEIGHTS DUE TO STRUCTURE OR MECHANICAL REQUIREMENTS, OBTAIN APPROVAL FROM WWCOT PRIOR TO INSTALLING FURRING.
5. LEVELS OF GYPSUM BOARD FINISH: COMPLY WITH REQUIREMENTS OF LEVELS "0" THROUGH "5". WHERE A FIRE–RESISTIVE RATING IS REQUIRED FOR THE GYPSUM BOARD ASSEMBLY, DETAILS OF CONSTRUCTION SHALL BE IN ACCORDANCE WITH REPORTS OF FIRE TESTS OF ASSEMBLIES THAT HAVE MET THE FIRE RATING REQUIREMENTS.
   a. LEVEL 0:
      (1)WHERE REQUIRED: IN TEMPORARY CONSTRUCTION.
      (2)FINISHING: NO TAPING, FINISHING OR ACCESSORIES REQUIRED.
   b. LEVEL 1:
      (1)WHERE REQUIRED: IN NON–FIRE RATED PLENUM AREAS ABOVE CEILINGS, IN ATTICS WHERE THE ASSEMBLY WOULD GENERALLY BE CONCEALED AND OTHER AREAS NOT NORMALLY OPEN TO VIEW
      (2)FINISHING: ALL ACCESSORIES, JOINTS AND INTERIOR ANGLES SHALL HAVE TAPE EMBEDDED IN JOINT COMPOUND. SURFACE SHALL BE FREE OF EXCESS JOINT COMPOUND. TOOL MARKS AND RIDGES ARE ACCEPTABLE.
   c. LEVEL 2:
      (1)WHERE REQUIRED: WHERE WATER RESISTANT GYPSUM BACKING BOARD IS USED AS A SUBSTRATE FOR TILE AND IN ELECTRICAL AND UTILITY ROOMS WHERE SURFACE APPEARANCE IS NOT OF PRIMARY CONCERN.
      (2)FINISHING: ALL JOINTS AND INTERIOR ANGLES SHALL HAVE TAPE EMBEDDED IN JOINT COMPOUND AND ONE SEPARATE COAT OF JOINT COMPOUND APPLIED OVER ALL JOINTS, ANGLES, FASTENER HEADS AND ACCESSORIES. SURFACE SHALL BE FREE OF EXCESS JOINT COMPOUND. TOOL MARKS AND RIDGES ARE ACCEPTABLE.
   d. LEVEL 3:
      (1)WHERE REQUIRED: IN APPEARANCE AREAS WHICH ARE TO RECEIVE HEAVY OR MEDIUM TEXTURE (SPRAY OR HAND APPLIED) FINISHES BEFORE FINAL PAINTING, OR WHERE HEAVY GRADE WALLCOVERINGS ARE TO BE APPLIED AS THE FINAL DECORATION. DO NOT USE THIS LEVEL OF FINISH WHERE SMOOTH PAINTED SURFACES, OR LIGHT TO MEDIUM WEIGHT WALLCOVERINGS ARE SPECIFIED.
      (2)FINISHING: ALL JOINTS AND INTERIOR ANGLES SHALL HAVE TAPE EMBEDDED IN JOINT COMPOUND AND TWO SEPARATE COATS OF JOINT COMPOUND APPLIED OVER ALL JOINTS, ANGLES, FASTENER HEADS AND ACCESSORIES. ALL JOINT COMPOUND SHALL BE SMOOTH AND FREE OF TOOL MARKS AND RIDGES.
   e. LEVEL 4:
      (1)WHERE REQUIRED: WHERE LIGHT TEXTURES OR LIGHT WEIGHT WALLCOVERINGS ARE TO BE APPLIED. DO NOT USE THIS LEVEL OF FINISH WHERE ENAMEL PAINTS OR UNBACKED VINYL WALLCOVERINGS ARE SPECIFIED.
      (2)FINISHING: ALL JOINTS AND INTERIOR ANGLES SHALL HAVE TAPE EMBEDDED IN JOINT COMPOUND AND THREE SEPARATE COATS OF JOINT COMPOUND APPLIED OVER ALL JOINTS, ANGLES, FASTENER HEADS AND ACCESSORIES. ALL JOINT COMPOUND SHALL BE SMOOTH AND FREE OF TOOL MARKS AND RIDGES.
   f. LEVEL 5:
      (1)WHERE REQUIRED: WHERE GLOSS, SEMI–GLOSS, ENAMEL OR NONTEXTURED FLAT PAINTS ARE SPECIFIED OR WHERE SEVERE LIGHTING CONDITIONS OCCUR AT WALL AND CEILING AREAS ABUTTING WINDOW MULLIONS OR SKYLIGHTS, LONG HALLWAYS, OR ATRIUMS WITH LARGE SURFACE AREAS FLOODED WITH ARTIFICIAL AND/OR NATURAL LIGHTING; IN LOBBIES WHERE LIGHT TROUGHS OCCUR; AND WHERE STRONG SIDE LIGHTING FROM WINDOWS OR SURFACE–MOUNTED LIGHT FIXTURES MAY REVEAL EVEN MINOR SURFACE IMPERFECTIONS.
      (2)FINISHING: ALL JOINTS AND INTERIOR ANGLES SHALL HAVE TAPE EMBEDDED IN JOINT COMPOUND AND THREE SEPARATE COATS OF JOINT COMPOUND APPLIED OVER ALL JOINTS, ANGLES, FASTENER HEADS AND ACCESSORIES. A THIN SKIM COAT OF JOINT COMPOUND OR A MATERIAL MANUFACTURED ESPECIALLY FOR THIS PURPOSE SHALL BE APPLIED TO THE ENTIRE SURFACE. THE SURFACE SHALL BE SMOOTH AND FREE OF TOOL MARKS & RIDGES.

E. FIRE PROTECTION

1. DOORS OPENING INTO ONE–HOUR FIRE–RESISTIVE CORRIDOR SHALL BE PROTECTED WITH A SMOKE OR DRAFT–STOP FIRE ASSEMBLY HAVING A MINIMUM 20–MINUTE RATING (TITLE 24, C.C.R.).
2. INTERIOR FINISHES AND FLAME RETARDANT (TITLE 19, CHAPTER 42, U.B.C.):
   a. INTERIOR WALL AND CEILING FINISHES SHALL NOT EXCEED A FLAME–SPREAD CLASSIFICATION OF 200 (CLASS III), EXCEPT AS REQUIRED BELOW.
   b. INTERIOR WALL AND CEILING FINISHES FOR EXIT CORRIDORS SHALL NOT EXCEED A FLAME–SPREAD CLASSIFICATION OF 75 (CLASS II).
   c. INTERIOR WALL AND CEILING FINISHES FOR ENCLOSED STAIRWAYS SHALL NOT EXCEED A FLAME–SPREAD CLASSIFICATION OF 25 (CLASS I).
   d. ANY DECORATIONS USED SHALL BE NONCOMBUSTIBLE OR FLAME–RETARDANT TREATED IN AN APPROVED MANNER (CURTAINS, DRAPES, SHADES, HANGINGS, ETC.).
3. EXITS (TITLE 24, C.C.R.):
   a. EXIT CORRIDORS AND EXTERIOR EXIT BALCONIES SHALL BE A MINIMUM OF 44" WIDE.
   b. AN EXIT WALKWAY WITH A MINIMUM WIDTH OF 44" SHALL BE MAINTAINED CONTINUOUSLY TO A PUBLIC WAY.
   c. EVERY EXIT DOOR SHALL BE OPENABLE FROM THE INSIDE WITHOUT THE USE OF A KEY, TOOL, OR SPECIAL KNOWLEDGE OR EFFORT. SPECIAL LOCKING DEVICES SHALL BE AN APPROVED TYPE.
   d. PANIC HARDWARE SHALL BE PROVIDED ON EXIT DOORS SERVING ROOMS, CORRIDORS, OR STAIRWAY HANDLING AN OCCUPANT CAPACITY OF 50 OR MORE PERSONS, FROM ANY GROUP A, E, OR I OCCUPANCY AND 10 OR MORE IN MOTION PICTURE THEATERS.
   e. ONLY PANIC HARDWARE APPROVED AND LISTED BY THE STATE FIRE MARSHAL SHALL BE INSTALLED.
   f. AISLES LEADING TO REQUIRED EXITS SHALL HAVE A 44" MIN. WIDTH
   g. GLAZING INSTALLED IN A ONE–HOUR CORRIDOR SHALL BE 1/4" WIRE GLASS IN STEEL FRAMES AND SHALL NOT EXCEED 25% OF CORRIDOR/ROOM COMMON WALL.
4. SIGNS:
   a. PROVIDE EXIT SIGNS AND DIRECTIONAL EXIT SIGNS WITH MINIMUM 6" HIGH BY 3/4" STROKE BLOCK LETTERS ON A CONTRASTING BACKGROUND.
   b. EXIT SIGNS SHALL BE ELECTRICALLY ILLUMINATED AND THE TWO LAMPS SHALL BE ENERGIZED FROM SEPARATE CIRCUITS. ILLUMINATION SHALL NORMALLY BE PROVIDED BY THE PREMISES WIRING SYSTEM. IN THE EVENT OF FAILURE OF THIS SYSTEM, ILLUMINATION SHALL BE AUTOMATICALLY PROVIDED FROM AN EMERGENCY SYSTEM. EMERGENCY LIGHTING SHALL GIVE A VALUE OF ONE FOOT CANDLE AT FLOOR LEVEL.
   c. THE AMOUNT AND LOCATIONS OF EXIT SIGNS SHALL BE DETERMINED BY THE FIRE DEPARTMENT.
5. FIRE LIFE SAFETY SYSTEM:
   a. ANY MODIFICATIONS TO THE FIRE LIFE SAFETY SYSTEM, SHALL BE SUBMITTED TO THE FIRE DEPT. FOR APPROVAL PRIOR TO CHANGE.
6. EXTEND AND OR MODIFY SPRINKLER AND LIFE SAFETY SYSTEM AS NEEDED.
7. PROVIDE A 2–A FIRE EXTINGUISHER EVERY 75 FEET OF TRAVEL.

F. MECHANICAL AND ELECTRICAL WORK:

1. DESIGN ALL THE SYSTEMS TO FIT WITHIN THE EXISTING CONDITIONS AND THE DESIGN OF THE TENANT IMPROVEMENT WORK. THE CONTRACTOR SHALL REMOVE ANY OF ITS WORK WHICH DOES NOT FIT AND SHALL REDESIGN AND REINSTALL THE WORK AT THE CONTRACTOR'S SOLE EXPENSE.
2. THE CONTRACTOR SHALL VERIFY AND COORDINATE THE EXACT LOCATIONS OF ALL LIGHT FIXTURES, AIR CONDITIONING GRILLES AND OTHER CEILING OUTLETS AS INDICATED ON DRAWINGS AND THEIR RELATIONSHIP TO EXISTING STRUCTURAL AND/OR MECHANICAL OBSTRUCTIONS ABOVE THE CEILING, PRIOR TO INSTALLATION OF CEILING GRID. NOTIFY WWCOT OF ANY CONDITIONS THAT WILL PREVENT THE INSTALLATION OF THE CEILING GRID OR THE CEILING OUTLETS.
3. MOUNT THERMOSTATS WITHIN 12" OF DOOR JAMBS OR CORNERS. DO NOT MOUNT THERMOSTATS MID–WALL.
4. PROVIDE FIRE DAMPERS COMPLYING WITH THE REQUIREMENTS OF U.B.C. STANDARD 43–7 IN THE FOLLOWING LOCATIONS (SEC. 4306 (J)):
   a. DUCT PENETRATIONS OF AREA OR OCCUPANCY SEPARATION WALLS.
   b. DUCTS PASSING THROUGH HORIZONTAL EXIT WALLS.
   c. DUCTS PENETRATING FIRE–RATED SHAFTS UNLESS EXHAUST OR RETURN–AIR SUB–DUCTS EXTEND 22 INCHES VERTICALLY IN A VENTED SHAFT AND THE AIRFLOW IS UPWARD.
   d. DUCTS PENETRATING THE CEILING OF FIRE–RESISTIVE FLOOR–CEILING OR ROOF–CEILING ASSEMBLIES SHALL BE PROTECTED IN ACCORDANCE WITH 4303 (b) 6.
   e. DUCTS PENETRATING FIRE–RESISTIVE ELEMENTS OF FIRE–RATED CORRIDOR WALLS.
5. MECHANICALLY VENTILATE TOILET ROOMS. PROVIDE AN AIR CHANGE EACH 15 MINUTES (SEC. 705).
6. ALL WATER CLOSETS SHALL BE OF THE LOW WATER CONSUMPTION TYPE.
7. CONTRACTOR SHALL COORDINATE POWER AND LIGHTING SYSTEMS WITH BUILDING CONTROL SYSTEMS.
8. ALL CONDUITS, OTHER THAN THAT USED FOR ELECTRICAL OUTLETS AND JUNCTION BOXES, SHALL RECEIVE PULL WIRES INSTALLED BY CONTRACTOR.
9. SEPARATE OUTLET BOXES LOCATED ON OPPOSITE SIDES OF WALLS BY 12" MINIMUM.

G. DISABLED ACCESS REQUIREMENTS:

1. EVERY REQUIRED ENTRANCE OR PASSAGE DOORWAY SHALL BE OF A SIZE AS TO PERMIT THE INSTALLATION OF A DOOR NOT LESS THAN 3'–0" IN WIDTH AND NOT LESS THAN 6'–8" IN HEIGHT. DOORS SHALL BE CAPABLE OF OPENING AT LEAST 90 DEGREES AND SHALL BE SO MOUNTED THAT THE CLEAR WIDTH OF THE DOORWAY IS NOT LESS THAN 32".
2. WHERE A PAIR OF DOORS IS UTILIZED, AT LEAST ONE OF THE DOORS SHALL PROVIDE A CLEAR UNOBSTRUCTED OPENING WIDTH OF 32" WITH THE LEAF POSITIONED AT AN ANGLE OF 90 DEGREES FROM ITS CLOSED POSITION.
3. LATCHING AND LOCKING DOORS THAT ARE HAND ACTIVATED AND WHICH ARE IN A PATH OF TRAVEL, SHALL BE OPERABLE WITH A SINGLE EFFORT BY LEVER TYPE HARDWARE, PANIC BARS, PUSH–PULL ACTIVATING BARS, OR OTHER HARDWARE DESIGNED TO PROVIDE PASSAGE WITHOUT REQUIRING THE ABILITY TO GRASP THE OPENING HARDWARE.
4. HAND ACTIVATED DOOR OPENING HARDWARE SHALL BE CENTERED BETWEEN 30" AND 44" ABOVE THE FLOOR.
5. THE FLOOR OR LANDING ON EACH SIDE OF AN ENTRANCE OR PASSAGE DOOR SHALL BE LEVEL AND CLEAR. THE LEVEL AND CLEAR AREA SHALL HAVE A LENGTH IN THE DIRECTION OF DOOR SWING OF AT LEAST 60" AND THE LENGTH OPPOSITE THE DIRECTION OF DOOR SWING OF 44" AS MEASURED AT RIGHT ANGLES TO THE PLANE OF THE DOOR IN ITS CLOSED POSITION.
6. THE WIDTH OF THE LEVEL AND CLEAR AREA ON THE PULL SIDE OF THE DOOR SHALL EXTEND 24" PAST THE STRIKE EDGE OF THE DOOR FOR EXTERIOR DOORS AND 18" PAST THE STRIKE EDGE FOR INTERIOR DOORS. ON THE PUSH SIDE, THE DIMENSION SHALL EXTEND 12" PAST THE STRIKE EDGE OF THE DOOR WHEN THE DOOR HAS A CLOSER AND LATCH. WHERE THE AREA PERPENDICULAR TO THE DOOR IS LESS THAN 48" AND THE DOOR IS EQUIPPED WITH A LATCH, THIS DIMENSION, PAST THE STRIKE EDGE OF THE DOOR ON THE PUSH SIDE, SHALL BE 24". THE DIMENSION BECOMES 48" IF THE DOOR HAS A CLOSER.
7. THE FLOOR OR LANDING SHALL BE NOT MORE THAN 1/2" LOWER THAN THE THRESHOLD OF THE DOORWAY. CHANGE IN LEVEL BETWEEN 1/4" AND 1/2" SHALL BE BEVELED WITH A SLOPE NO GREATER THAN 1:2.
8. THE BOTTOM 10" OF ALL DOORS EXCEPT AUTOMATIC AND SLIDING SHALL HAVE A SMOOTH UNINTERRUPTED SURFACE TO ALLOW THE DOOR TO BE OPENED BY A WHEELCHAIR FOOTREST WITHOUT CREATING A TRAP OR HAZARDOUS CONDITION. WHERE NARROW FRAME DOORS ARE USED, A 10" HIGH SMOOTH PANEL SHALL BE INSTALLED ON THE PUSH SIDE OF THE DOOR, WHICH WILL ALLOW THE DOOR TO BE OPENED BY A WHEELCHAIR FOOTREST WITHOUT CREATING A TRAP OR HAZARDOUS CONDITION.
9. A NARROW FRAME WITH A BEVELED TOP EDGE (30 DEGREES MAXIMUM BEVEL TO VERTICAL PLANE) INSTALLED AT THE BOTTOM OF A GLASS DOOR (WITH NO SIDE FRAMES) MAY BE USED IN LIEU OF PROVIDING THE REQUIRED 10" UNINTERRUPTED SURFACE AT THE BOTTOM OF THE DOOR.
10. MAXIMUM EFFORT TO OPERATE DOORS SHALL NOT EXCEED 8–1/2 POUNDS FOR EXTERIOR DOORS AND 5 POUNDS FOR INTERIOR DOORS. SUCH PULL OR PUSH EFFORT BEING APPLIED AT RIGHT ANGLES TO HINGED DOORS AND AT THE CENTER PLANE OF SLIDING OR FOLDING DOORS. COMPENSATING DEVICES OR AUTOMATIC DOOR OPERATORS MAY BE UTILIZED TO MEET THE ABOVE STANDARDS. WHEN FIRE DOORS ARE REQUIRED, THE MAXIMUM EFFORT TO OPERATE THE DOOR MAY NOT TO EXCEED 15 POUNDS.
11. WHEN SANITARY FACILITIES ARE LOCATED ON ACCESSIBLE FLOORS OF A BUILDING, THEY SHALL BE MADE ACCESSIBLE TO THE PHYSICALLY DISABLED.
12. UNISEX SANITARY FACILITIES SHALL BE IDENTIFIED BY A CIRCLE 1/4" THICK, 12" IN DIAMETER WITH 1/4" THICK TRIANGLE SUPERIMPOSED ON THE CIRCLE AND WITHIN THE 12" DIAMETER, SEE DETAIL 3/A6.
13. THERE SHALL BE SUFFICIENT SPACE IN THE TOILET ROOM FOR A WHEELCHAIR MEASURING 30" WIDE BY 48" LONG TO ENTER THE ROOM AND PERMIT THE DOOR TO CLOSE.
14. THE WATER CLOSET SHALL BE LOCATED IN A SPACE WHICH PROVIDES A 28" CLEAR SPACE FROM A FIXTURE OR A 32" WIDE CLEAR SPACE FROM A WALL AT ONE SIDE AND 48" OF CLEAR SPACE IN FRONT OF THE WATER CLOSET.
15. THE DISTANCE BETWEEN THE CENTER LINE OF A WATER CLOSET AND AN ADJOINING WALL SHALL BE 15–1/2" MINIMUM, 19" MAXIMUM.
16. LOCATE THE CENTER LINE OF THE WATER CLOSET BETWEEN 17" AND 19" FROM THE FINISHED FACE OF THE WALL.
17. THE HEIGHT OF ACCESSIBLE WATER CLOSETS SHALL BE A MINIMUM OF 17" AND A MAXIMUM OF 18" MEASURED TO THE TOP OF THE TOILET SEAT.
18. LAVATORIES SHALL BE MOUNTED WITH A MINIMUM DISTANCE OF 18" FROM FACE OF SIDEWALL TO THE CENTER LINE OF THE FIXTURE. ACCESSIBLE LAVATORIES SHALL BE MOUNTED WITH THE RIM OR COUNTER SURFACE NO HIGHER THAN 34" ABOVE THE FINISHED FLOOR.
19. TOILET FLUSH CONTROLS SHALL BE OPERABLE WITH ONE HAND, AND SHALL NOT REQUIRE TIGHT GRASPING, PINCHING, OR TWISTING OF THE WRIST. CONTROLS FOR THE FLUSH VALVES SHALL BE MOUNTED ON THE WIDE SIDE OF THE TOILET AREAS, NO MORE THAN 44" ABOVE THE FLOOR. THE FORCE REQUIRED TO ACTIVATE CONTROLS SHALL BE NO GREATER THAN 5 POUNDS.
20. A CLEAR FLOOR SPACE 30" WIDE X 48" LONG SHALL BE PROVIDED IN FRONT OF A LAVATORY TO ALLOW A FORWARD APPROACH. SUCH CLEAR FLOOR SPACE MAY ADJOIN OR OVERLAP AN ACCESSIBLE ROUTE AND MAY EXTEND INTO KNEE AND TOE SPACE UNDERNEATH THE LAVATORY.
21. LAVATORIES SHALL BE MOUNTED WITH A CLEARANCE OF AT LEAST 29" FROM THE FLOOR TO THE BOTTOM OF THE APRON WITH KNEE CLEARANCE UNDER THE FRONT LIP EXTENDING A MINIMUM OF 30" IN WIDTH WITH 8" MINIMUM DEPTH AT THE TOP. TOE CLEARANCE SHALL BE THE SAME WIDTH AND SHALL BE A MINIMUM OF 9" HIGH FROM THE FLOOR AND A MINIMUM OF 17" DEEP FROM THE FRONT OF THE LAVATORY.
22. HOT WATER AND DRAIN PIPES UNDER LAVATORIES SHALL BE INSULATED OR OTHERWISE COVERED. THERE SHALL BE NO SHARP OR ABRASIVE SURFACES UNDER LAVATORIES. PROVIDE 1/2" THICK "ARMAFLEX" OR "RUBATEX" OR "HANDYSHIELD SAFETY COVERS". FAUCET CONTROLS AND OPERATING MECHANISMS SHALL BE OPERABLE WITH ONE HAND AND SHALL NOT REQUIRE TIGHT GRASPING, PINCHING OR TWISTING OF THE WRIST. THE FORCE REQUIRED TO ACTIVATE CONTROLS SHALL BE NO GREATER THAN 5 POUNDS. LEVER–OPERATED, PUSH–TYPE AND ELECTRONICALLY SELF–CLOSING VALVES ARE ALLOWED IF THE FAUCET REMAINS OPEN FOR AT LEAST 10 SECONDS.
23. MIRRORS SHALL BE MOUNTED WITH THE BOTTOM EDGE NOT MORE THAN 40" FROM THE FLOOR.
24. LOCATE TOWEL AND WASTE RECEPTACLES WITH ALL OPERABLE PARTS NOT MORE THAN 40" FROM THE FLOOR.
25. LOCATE THE CENTERLINE OF TOILET TISSUE DISPENSERS ON THE WALL WITHIN 12" OF THE FRONT EDGE OF THE TOILET SEAT AND 25" ABOVE FINISH FLOOR.
26. GRAB BARS, FASTENERS AND MOUNTING DEVICES SHALL BE DESIGNED FOR 250 POUNDS PER LINEAR FT.
27. GRAB BARS SHALL BE LOCATED ON EACH SIDE, OR ONE SIDE AND THE BACK OF THE PHYSICALLY DISABLED TOILET STALL OR COMPARTMENT AND SHALL BE SECURELY ATTACHED 33" ABOVE AND PARALLEL TO THE FLOOR.
28. GRAB BARS AT THE SIDE OF WATER CLOSETS SHALL BE LOCATED 15" TO 16–1/2" (PLUS OR MINUS 1") FROM THE CENTER LINE OF THE WATER CLOSET STOOL.
29. GRAB BARS AT THE SIDE SHALL BE AT LEAST 42" LONG WITH THE FRONT END POSITIONED 24" IN FRONT OF THE WATER CLOSET STOOL, AND GRAB BARS AT THE BACK SHALL BE NOT LESS THAN 36" LONG.
30. THE DIAMETER OR WIDTH OF THE GRIPPING SURFACES OF A GRAB BAR SHALL BE 1–1/4" TO 1–1/2" OR THE SHAPE SHALL PROVIDE AN EQUIVALENT GRIPPING SURFACE.
31. IF THE GRAB BARS ARE MOUNTED ADJACENT TO A WALL, THE SPACE BETWEEN THE WALL AND THE GRAB BARS SHALL BE 1–1/2".
32. A GRAB BAR AND ANY WALL OR OTHER SURFACE ADJACENT TO IT SHALL BE FREE OF ANY SHARP OR ABRASIVE ELEMENTS.
33. GRAB BARS SHALL NOT ROTATE WITHIN THEIR FITTINGS.
34. EDGES SHALL HAVE A MINIMUM RADIUS OF 1/8".
35. THE CENTER OF RECEPTACLE OUTLETS SHALL BE NOT LESS THAN 12" ABOVE THE FLOOR.
36. THE CENTER OF THE GRIP OF THE OPERATING HANDLE OF SWITCHES INTENDED TO BE USED BY THE OCCUPANT OF THE ROOM OR AREA TO CONTROL LIGHTING AND RECEPTACLE OUTLETS, APPLIANCES, OR COOLING, HEATING AND VENTILATING EQUIPMENT, SHALL BE NOT LESS THAN 3'–0" NOR MORE THAN 4'–0" ABOVE THE FLOOR OR WORKING PLATFORM.
37. THE CENTER OF FIRE ALARM INITIATING DEVICES (BOXES) SHALL BE LOCATED 48" ABOVE THE LEVEL OF THE FLOOR, WORKING PLATFORM, GROUND SURFACE OR SIDEWALK.
38. IF EMERGENCY WARNING SYSTEMS ARE REQUIRED THEY SHALL ACTIVATE A MEANS OF WARNING THE HEARING IMPAIRED. FLASHING VISUAL WARNING SHALL HAVE FREQUENCY OF NOT MORE THAN 60 FLASHES PER MINUTE.

– END –

General Notes

WWCOT
Widom Wein Cohen O'Leary Terasawa
3130 Wilshire Boulevard
Sixth Floor
Santa Monica, California 90403
T (310) 828-0040
F (310) 453-9432
www.wwcot.com
Inland Empire
Palm Springs
Shanghai, China

Building Department Submittal:
Issued For Bid:
Issued For Construction:

Issued for Review & Approval: 06.19.07

State Bar of California
4th Floor-Remodel

1149 South Hill Street
4th Floor-Remodel
Los Angeles, Ca 90015

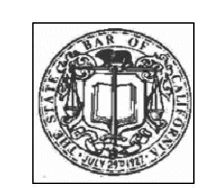

Project Number: 075026.00

Title and General Notes

Date: 05-14-07
Drawn By: DM
Checked By: BL

Sheet No. T-1

File Path & Name: F:\PROJECTS\075026-00\A-CD\SHEETS\T-1.DWG
© WWCOT 2007 Jul 11, 2007 - 02:42 pm

Attachment B

Bid Form

Project: Interior Construction/Remodel
The State Bar of California
1149 South Hill Street
Los Angeles, CA 90015

Contractor: _____

_____

_____

Construction Bid

A. Guaranteed Maximum Price

Based on the information contained within this Request for Proposal, inclusive of all construction documents attached,_____ (General Contractor) proposes a Guaranteed Maximum Price bid of $_____.

B. Overhead and Profit

The overhead and profit proposed for the work performed by the General Contractor is _____% and is included in the Guaranteed Maximum Price.

C. General Conditions

The General Conditions amount proposed by the General Contractor is $_____ and is also included in the Guaranteed Maximum Price.

D. Detailed Bid Submittal

Use Attached Documents for Bid Submittal

AIA® Document A111™ – 1997

Standard Form of Agreement Between Owner and Contractor

where the basis for payment is the COST OF THE WORK PLUS A FEE with a negotiated Guaranteed Maximum Price

AGREEMENT made as of the 16th day of January in the year 2006.
(In words, indicate day, month and year)

BETWEEN the Owner:
(Name, address and other information)

THE STATE BAR OF CALIFORNIA

Attn: Sharon Pearl-Jacobvitz

and the Contractor:
(Name, address and other information)

The Project is:
(Name and location)

The Engineer is:
(Name, address and other information)

The Owner and Contractor agree as follows.

ADDITIONS AND DELETIONS: The author of this document has added information needed for its completion. The author may also have revised the text of the original AIA standard form. An *Additions and Deletions Report* that notes added information as well as revisions to the standard form text is available from the author and should be reviewed. A vertical line in the left margin of this document indicates where the author has added necessary information and where the author has added to or deleted from the original AIA text.

This document has important legal consequences. Consultation with an attorney is encouraged with respect to its completion or modification.

This document is not intended for use in competitive bidding.

AIA Document A201-1997, General Conditions of the Contract for Construction, is adopted in this document by reference. Do not use with other general conditions unless this document is modified.

This document has been approved and endorsed by the Associated General Contractors of America.

AIA Document A111™ – 1997. Copyright © 1920, 1925, 1951, 1958, 1961, 1963, 1967, 1974, 1978, 1987 and 1997 by The American Institute of Architects. All rights reserved. WARNING: This AIA® Document is protected by U.S. Copyright Law and International Treaties. Unauthorized reproduction or distribution of this AIA® Document, or any portion of it, may result in severe civil and criminal penalties, and will be prosecuted to the maximum extent possible under the law. This document was produced by AIA software at 20:09:44 on 01/09/2006 under Order No.1000179669_1 which expires on 5/16/2006, and is not for resale.
User Notes: A111-21989 ver. 1 Seismic Retrofit (11/11/05)
(2441963102)

ARTICLE 1 THE CONTRACT DOCUMENTS

The Contract Documents consist of this Agreement, Conditions of the Contract (General, Supplementary and other Conditions), Drawings, Specifications, Addenda issued prior to execution of this Agreement, other documents listed in this Agreement and Modifications issued after execution of this Agreement; these form the Contract, and are as fully a part of the Contract as if attached to this Agreement or repeated herein. The Contract represents the entire and integrated agreement between the parties hereto and supersedes prior negotiations, representations or agreements, either written or oral. An enumeration of the Contract Documents, other than Modifications, appears in Article 15. If anything in the other Contract Documents is inconsistent with this Agreement, then conflicts or discrepancies shall be resolved in the following descending order of priority: (i) this Agreement (including any exhibits); (ii) approved revisions and addenda of later date take precedence over those of earlier date or original documents; (iii) modifications to the General Conditions; (iv) the General Conditions; and (v) Drawings and Specifications (Drawings governing Specifications for quantity and location and Specifications governing Drawings for quality and performance. In the event of ambiguity in quantity or quality, the greater quantity and the better quality shall govern. Work not particularly detailed or specified shall be performed in the same manner as similar portions of the work that are detailed or specified.)

ARTICLE 2 THE WORK OF THIS CONTRACT

The Contractor shall fully execute the Work described in the Contract Documents or reasonably inferable therefrom as necessary to produce the results intended by the Contract Documents (the "Work"), except to the extent specifically indicated in the Contract Documents to be the responsibility of others (including without limitation, Paragraph 3.2 of the General Conditions).

§ 2.1 Contractor shall perform all the work required by the Contract Documents for the complete construction of the Project in accordance with the Contract Documents, which shall include but not limited to relocation of existing utilities, landscaping, irrigation, erosion control (if applicable), excavation, shoring, bracing and grading of the Project site. Contractor shall provide and furnish all materials, supplies, equipment and tools, implements, and all other facilities, and all other labor, supervision, transportation, utilities, storage, appliances and all other services as and when required for or in connection with the complete construction of the Project, including any off site construction shown on or reasonably inferable from the Contract Documents (hereinafter collectively referred to as the "Work").

ARTICLE 3 RELATIONSHIP OF THE PARTIES

The Contractor accepts the relationship of trust and confidence established by this Agreement and covenants with the Owner to cooperate with the Architect and exercise the Contractor's best skill, efforts and judgment in furthering the interests of the Owner; to furnish efficient business administration and supervision; to furnish at all times an adequate supply of workers and materials; and to perform the Work in an expeditious and economical manner consistent with the Owner's interests. The Owner agrees to furnish and approve, in a timely manner, information required by the Contractor and to make payments to the Contractor in accordance with the requirements of the Contract Documents.

ARTICLE 4 DATE OF COMMENCEMENT AND SUBSTANTIAL COMPLETION

§ 4.1 The date of commencement of the Work shall be the date of this Agreement.
(Insert the date of commencement, if it differs from the date of this Agreement or, if applicable, state that the date will be fixed in a notice to proceed.)

(Paragraph deleted)

§ 4.2 The Contract Time shall be measured from the date of commencement.

§ 4.3 The Contractor shall diligently prosecute the Work and achieve Substantial Completion of the entire Work not later than the completion date set forth in the schedule attached hereto a Exhibit A.
(Insert number of calendar days. Alternatively, a calendar date may be used when coordinated with the date of commencement. Unless stated elsewhere in the Contract Documents, insert any requirements for earlier Substantial Completion of certain portions of the Work.)

AIA Document A111™ – 1997. Copyright © 1920, 1925, 1951, 1958, 1961, 1963, 1967, 1974, 1978, 1987 and 1997 by The American Institute of Architects. All rights reserved. WARNING: This AIA® Document is protected by U.S. Copyright Law and International Treaties. Unauthorized reproduction or distribution of this AIA® Document, or any portion of it, may result in severe civil and criminal penalties, and will be prosecuted to the maximum extent possible under the law. This document was produced by AIA software at 20:09:44 on 01/09/2006 under Order No.1000179669_1 which expires on 5/16/2006, and is not for resale.
User Notes: A111-21989 ver. 1 Seismic Retrofit (11/11/05) (2441963102)

Portion of Work **Substantial Completion date**

, subject to authorized adjustments of this Contract Time as provided in the Contract Documents. A Progress Schedule is attached hereto as Exhibit A ("Schedule"). Time is of the essence of this Agreement.

§4.4 Owner and Contractor acknowledge and agree that if Contractor fails to achieve Substantial Completion of the Work within the Contract Time (as such may be extended in accordance with Contract Documents). Owner will suffer, as a result of Contractor's failure, substantial damages which are both extremely difficult and impracticable to ascertain. Therefore, Owner and Contractor, having reasonably endeavored, but failed, to ascertain an amount bearing a reasonable relationship to the actual damage that Owner will incur if Contractor fails to achieve Substantial Completion of the Work by the Contract Time (as such may be extended in accordance with the Contract Documents), (agree that in addition to all other damages to which Owner may be entitled, in the event Contractor shall fail to achieve Substantial Completion of the Work by the Contract Time (as such may be extended in accordance with the Contract Documents) Contractor agrees to pay the Owner as liquidated damages, and not as a penalty but as a reasonable estimate of the amount of damages Owner will suffer, the amount of Two Thousand Two Hundred Fifty Dollars ($2,250.00) a day for each calendar day following the twenty-first (21st) calendar day after the Contract Time (as such may be extended in accordance with Contract Documents) during which Contractor fails to achieve Substantial Completion of the Work. Notwithstanding the foregoing to the contrary, Owner and Contractor acknowledge and agree that this liquidated damages provision shall only apply to damages caused by Contractor's failure to achieve Substantial Completion of the Work by the Contract Time. The parties further acknowledge and agree that Owner is entitled to any and all legal and equitable remedies Owner may have where Owner's damages are caused by any reason other than Contractor's failure to achieve Substantial Completion of the Work by the Contract Time.
(Insert provisions, if any, for liquidated damages relating to failure to complete on time, or for bonus payments for early completion of the Work.)

ARTICLE 5 BASIS FOR PAYMENT
§ 5.1 CONTRACT SUM
§ 5.1.1 The Owner shall pay the Contractor the Contract Sum in current funds for the Contractor's performance of the Contract. The Contract Sum is the Cost of the Work as defined in Article 7 plus the Contractor's Fee.

§ 5.1.2 The Contractor's Fee is: See Exhibit B attached hereto.
(State a lump sum, percentage of Cost of the Work or other provision for determining the Contractor's Fee, and describe the method of adjustment of the Contractor's Fee for changes in the Work.)

§ 5.2 GUARANTEED MAXIMUM PRICE
§ 5.2.1 The sum of the Cost of the Work and the Contractor's Fee is guaranteed by the Contractor not to exceed (See the Guaranteed Maximum Price contained in Exhibit B attached hereto), subject to additions and deductions by Change Order as provided in the Contract Documents. Such maximum sum is referred to in the Contract Documents as the Guaranteed Maximum Price. Costs which would cause the Guaranteed Maximum Price to be exceeded shall be paid by the Contractor without reimbursement by the Owner.
(Insert specific provisions if the Contractor is to participate in any savings.)

See Exhibit B.

§ 5.2.2 The Guaranteed Maximum Price is based on the following alternates, if any, which are described in the Contract Documents and are hereby accepted by the Owner:
(State the numbers or other identification of accepted alternates. If decisions on other alternates are to be made by the Owner subsequent to the execution of this Agreement, attach a schedule of such other alternates showing the amount for each and the date when the amount expires.)

NONE.

§ 5.2.3 Unit prices, if any, are as follows:

AIA Document A111™ – 1997. Copyright © 1920, 1925, 1951, 1958, 1961, 1963, 1967, 1974, 1978, 1987 and 1997 by The American Institute of Architects. All rights reserved. WARNING: This AIA® Document is protected by U.S. Copyright Law and International Treaties. Unauthorized reproduction or distribution of this AIA® Document, or any portion of it, may result in severe civil and criminal penalties, and will be prosecuted to the maximum extent possible under the law. This document was produced by AIA software at 20:09:44 on 01/09/2006 under Order No.1000179669_1 which expires on 5/16/2006, and is not for resale.
User Notes: A111-21989 ver. 1 Seismic Retrofit (11/11/05)

See Exhibit B

Description	Units	Price ($ 0.00)

§ 5.2.4 Allowances, if any, are as follows
(Identify and state the amounts of any allowances, and state whether they include labor, materials, or both.)

See Exhibit B

Allowance	Amount ($ 0.00)	Included items

§ 5.2.5 Assumptions, if any, on which the Guaranteed Maximum Price is based are as follows:

See Exhibit B.

§ 5.2.6 To the extent that the Drawings and Specifications are anticipated to require further development by the Architect, the Contractor has provided in the Guaranteed Maximum Price for such further development consistent with the Contract Documents and reasonably inferable therefrom. Such further development does not include such things as changes in scope, systems, kinds and quality of materials, finishes or equipment, all of which, if required, shall be incorporated by Change Order.

ARTICLE 6 CHANGES IN THE WORK

§ 6.1 Adjustments to the Guaranteed Maximum Price on account of changes in the Work may be determined by any of the methods listed in Section 7.3.3 of AIA Document A201-1997.

§ 6.2 In calculating adjustments to subcontracts (except those awarded with the Owner's prior consent on the basis of cost plus a fee), the terms "cost" and "fee" as used in Section 7.3.3.3 of AIA Document A201-1997 and the terms "costs" and "a reasonable allowance for overhead and profit" as used in Section 7.3.6 of AIA Document A201-1997 shall have the meanings assigned to them in AIA Document A201-1997 and shall not be modified by Articles 5, 7 and 8 of this Agreement. Adjustments to subcontracts awarded with the Owner's prior consent on the basis of cost plus a fee shall be calculated in accordance with the terms of those subcontracts.

§ 6.3 In calculating adjustments to the Guaranteed Maximum Price, the terms "cost" and "costs" as used in the above-referenced provisions of AIA Document A201-1997 shall mean the Cost of the Work as defined in Article 7 of this Agreement.

§ 6.4 Contractor acknowledges and agrees that Contractor is fully familiar with all aspects required for the compete construction of the Project. It is understood by the parties hereto that the Drawings and Specifications necessary for construction of the Project are complete enough so as to enable Contractor to complete the Project for the Guaranteed Maximum Price. It is further understood and that although the Drawings and Specifications are adequate for pricing and, in certain respects, performance of the Work, completion of the Drawings and Specifications will be accomplished from time to time. No adjustment in the Guaranteed Maximum Price or the Contract Time shall be made unless the completion of the Contract Documents result in a material "Scope Change" (as hereinafter defined). Contractor and Owner agree that the price set forth as the Guaranteed Maximum Price is based on Contractor's total familiarity with the Project and the performance of pre-construction services, as well as Contractor's determination that the information set forth in the Drawings and Specifications is sufficient to define the scope of the Work and allow Contractor to guarantee to perform the Work for the Guaranteed Maximum Price. The Drawings and Specifications shall be completed by the Architect as necessary for construction at the times indicated in the Schedule. Contractor acknowledges and agrees that the price for the Work included in the Guaranteed Maximum Price includes all contingencies required by Contractor's performance of the Work unless a "Scope Change" is authorized by Owner. A "Scope Change" shall be a change which (i) was not reasonably foreseeable or inferable by a contractor of Contractor's experience and expertise from, or a natural outgrowth of, the Drawings, Specifications and deliberations between Owner and Contractor as of the date of this Agreement; (ii) commits Contractor to utilize substantially more labor, supervisory personnel or construction materials than originally intended due to increased

AIA Document A111™ – 1997. Copyright © 1920, 1925, 1951, 1958, 1961, 1963, 1967, 1974, 1978, 1987 and 1997 by The American Institute of Architects. All rights reserved. WARNING: This AIA® Document is protected by U.S. Copyright Law and International Treaties. Unauthorized reproduction or distribution of this AIA® Document, or any portion of it, may result in severe civil and criminal penalties, and will be prosecuted to the maximum extent possible under the law. This document was produced by AIA software at 20:09:44 on 01/09/2006 under Order No.1000179669_1 which expires on 5/16/2006, and is not for resale.
User Notes: A111-21989 ver. 1 Seismic Retrofit (11/11/05)

building area or addition features; and (iii) was the subject of a written claim for extras delivered to Owner by Contractor within fifteen (15) days of receipt by Contractor of "for construction" Drawings and Specifications by Architect.

§ 6.5 No change in the Work, whether by way of alteration or addition to the Work, shall be the basis of an addition to the Guaranteed Maximum Price or a change in the Contract Time unless and until such alteration or addition has been authorized by a written Change Order or Construction Change Directive executed and issued in accordance with and in strict compliance with the requirements of the Contract Documents. This requirement is of the essence of the Contract Documents. Accordingly, no course of conduct or dealings between the parties, nor express or implied acceptance of alterations or additions to the Work, and no claim that the Owner has been unjustly enriched by any alteration or addition to the Work, whether there is in fact any such unjust enrichment, shall be the basis for any claim to an increase in the Guaranteed Maximum Price or change in the Contract Time.

ARTICLE 7 COSTS TO BE REIMBURSED

§ 7.1 COST OF THE WORK

The term Cost of the Work shall mean costs necessarily incurred by the Contractor in the proper performance of the Work. Such costs shall be at rates not higher than the standard paid at the place of the Project except with prior written consent of the Owner. The Cost of the Work shall include only the items set forth in this Article 7.

§ 7.2 LABOR COSTS

§ 7.2.1 Wages of construction workers directly employed by the Contractor to perform the construction of the Work at the site or, with the Owner's prior written approval, at off-site workshops.

§ 7.2.2 Wages or salaries of the Contractor's supervisory and administrative personnel when stationed at the site with the Owner's prior written approval. Contractor's labor rates are subject to Owner's prior written approval.
(If it is intended that the wages or salaries of certain personnel stationed at the Contractor's principal or other offices shall be included in the Cost of the Work, identify in Article 14 the personnel to be included and whether for all or only part of their time, and the rates at which their time will be charged to the Work.)

§ 7.2.3 Wages and salaries of the Contractor's supervisory or administrative personnel engaged, at factories, workshops or on the road, in expediting the production or transportation of materials or equipment required for the Work, but only for that portion of their time required for the Work.

§ 7.2.4 Costs paid or incurred by the Contractor for taxes, insurance, contributions, assessments and benefits required by law or collective bargaining agreements and, for personnel not covered by such agreements, customary benefits such as sick leave, medical and health benefits, holidays, vacations and pensions, provided such costs are based on wages and salaries included in the Cost of the Work under Sections 7.2.1 through 7.2.3. All such costs pursuant to this Subparagraph 7.2.4 shall be subject to Owner's prior written approval.

§ 7.3 SUBCONTRACT COSTS

§ 7.3.1 Payments made by the Contractor to Subcontractors in accordance with the requirements of the subcontracts.

§ 7.4 COSTS OF MATERIALS AND EQUIPMENT INCORPORATED IN THE COMPLETED CONSTRUCTION

§ 7.4.1 Costs, including transportation and storage by third parties, of materials and equipment incorporated or to be incorporated in the completed construction, that have been approved in writing by Owner.

§ 7.4.2 Costs of materials described in the preceding Section 7.4.1 in excess of those actually installed to allow for reasonable waste and spoilage. Unused excess materials, if any, shall become the Owner's property at the completion of the Work or, at the Owner's option, shall be sold by the Contractor. Any amounts realized from such sales shall be credited to the Owner as a deduction from the Cost of the Work.

§ 7.5 COSTS OF OTHER MATERIALS AND EQUIPMENT, TEMPORARY FACILITIES AND RELATED ITEMS

§ 7.5.1 Costs, including transportation and storage, installation, maintenance, dismantling and removal of materials, supplies, temporary facilities, machinery, equipment, and hand tools not customarily owned by construction workers, that are provided by the Contractor at the site and fully consumed in the performance of the Work; and cost (less salvage value) of such items if not fully consumed, whether sold to others or retained by the Contractor. Cost for items previously used by the Contractor shall mean fair market value.

AIA Document A111™ – 1997. Copyright © 1920, 1925, 1951, 1958, 1961, 1963, 1967, 1974, 1978, 1987 and 1997 by The American Institute of Architects. All rights reserved. WARNING: This AIA® Document is protected by U.S. Copyright Law and International Treaties. Unauthorized reproduction or distribution of this AIA® Document, or any portion of it, may result in severe civil and criminal penalties, and will be prosecuted to the maximum extent possible under the law. This document was produced by AIA software at 20:09:44 on 01/09/2006 under Order No.1000179669_1 which expires on 5/16/2006, and is not for resale.
User Notes: A111-21989 ver. 1 Seismic Retrofit (11/11/05) (2441963102)

§ 7.5.2 Rental charges for temporary facilities, machinery, equipment, and hand tools not customarily owned by construction workers that are provided by the Contractor at the site, rented only from third parties and not from the Contractor, and costs of transportation, installation, minor repairs and replacements, dismantling and removal thereof. Rates and quantities of equipment rented shall be subject to the Owner's prior written approval.

§ 7.5.3 Costs of removal of debris from the site.

§ 7.5.4 Costs of document reproductions, facsimile transmissions and long-distance telephone calls, postage and parcel delivery charges, telephone service at the site and reasonable petty cash expenses of the site office.

§ 7.5.5 That portion of the reasonable expenses of the Contractor's personnel incurred while traveling in discharge of duties connected with the Work. Such expenses shall be subject to the Owner's prior written approval.

§ 7.5.6 Costs of materials and equipment suitably stored off the site at a mutually acceptable location, if approved in advance and in writing by the Owner.

§ 7.6 MISCELLANEOUS COSTS

§ 7.6.1 That portion of insurance and bond premiums that can be directly attributed to this Contract:

§ 7.6.2 Sales, use or similar taxes imposed by a governmental authority that are related to the Work.

§ 7.6.3 Fees and assessments for the building permit and for other permits, licenses and inspections for which the Contractor is required by the Contract Documents to pay.

§ 7.6.4 Fees of laboratories for tests required by the Contract Documents, except those related to defective or nonconforming Work.

§ 7.6.5 Royalties and license fees paid for the use of a particular design, process or product required by the Contract Documents; the cost of defending suits or claims for infringement of patent rights arising from such requirement of the Contract Documents; and payments made in accordance with legal judgments against the Contractor resulting from such suits or claims and payments of settlements made with the Owner's consent. However, such costs of legal defenses, judgments and settlements shall not be included in the calculation of the Contractor's Fee or subject to the Guaranteed Maximum Price. If such royalties, fees and costs are excluded by the last sentence of Section 3.17.1 of AIA Document A201-1997 or other provisions of the Contract Documents, then they shall not be included in the Cost of the Work.

§ 7.6.6 [Intentional Deleted.]

§ 7.6.7 Deposits lost for causes other than the Contractor's or its Subcontractor's (of every tier) negligence or failure to fulfill a specific responsibility to the Owner as set forth in the Contract Documents.

§ 7.6.8 [Intentional Deleted.]

§ 7.6.9 Expenses incurred in accordance with the Contractor's standard personnel policy for relocation and temporary living allowances of personnel required for the Work, if approved in advance and in writing by the Owner.

§ 7.7 OTHER COSTS AND EMERGENCIES

§ 7.7.1 Other costs incurred in the performance of the Work if and to the extent approved in advance and in writing by the Owner.

§ 7.7.2 Costs due to emergencies not caused by Contractor or its Subcontractors of every tier incurred in taking action to prevent threatened damage, injury or loss in case of an emergency affecting the safety of persons and property, as provided in Section 10.6 of AIA Document A201-1997.

§ 7.7.3 [Intentional Deleted.]

AIA Document A111™ – 1997. Copyright © 1920, 1925, 1951, 1958, 1961, 1963, 1967, 1974, 1978, 1987 and 1997 by The American Institute of Architects. All rights reserved. WARNING: This AIA® Document is protected by U.S. Copyright Law and International Treaties. Unauthorized reproduction or distribution of this AIA® Document, or any portion of it, may result in severe civil and criminal penalties, and will be prosecuted to the maximum extent possible under the law. This document was produced by AIA software at 20:09:44 on 01/09/2006 under Order No.1000179669_1 which expires on 5/16/2006, and is not for resale.
User Notes: A111-21989 ver. 1 Seismic Retrofit (11/11/05) (2441963102)

ARTICLE 8 COSTS NOT TO BE REIMBURSED

§ 8.1 The Cost of the Work shall not include:

§ 8.1.1 Salaries and other compensation of the Contractor's personnel stationed at the Contractor's principal office or offices other than the site office, except as specifically provided in Sections 7.2.2 and 7.2.3 or as may be provided in Article 14.

§ 8.1.2 Expenses of the Contractor's principal office and offices other than the site office.

§ 8.1.3 Overhead and general expenses, except as may be expressly included in Article 7.

§ 8.1.4 The Contractor's capital expenses, including interest on the Contractor's capital employed for the Work.

§ 8.1.5 Rental costs of machinery and equipment, except as specifically provided in Section 7.5.2.

§ 8.1.6 Costs due to the negligence or failure to fulfill a specific responsibility of the Contractor, Subcontractors and suppliers or anyone directly or indirectly employed by any of them or for whose acts any of them may be liable.

§ 8.1.7 Any cost not specifically and expressly described in Article 7.

§ 8.1.8 Costs, other than costs included in Change Orders approved by the Owner, that would cause the Guaranteed Maximum Price to be exceeded.

§ 8.1.9 Amounts required to be paid by Contractor for federal, state or local income or franchise taxes.

§ 8.1.10 Costs associated with Contractor's failure to obtain any and all applicable permits in a timely manner, as more fully described in the General Conditions.

§ 8.1.11 The costs incurred by Contractor resulting from the failure of Contractor or its Subcontractors to coordinate their work with the work of Owner and its contractors, if any, or otherwise to fail to comply with written directives of Owner not in conflict with the Schedule.

§ 8.1.12 Unless otherwise agreed by Owner in writing, any acceleration costs, including any and all overtime wages, arising as a result of delay in carrying out the Work caused by Contractor or its Subcontractors of any tier.

§ 8.1.13 Any costs or expenses in connection with any indemnity provided by Contractor pursuant to the Contract Documents.

ARTICLE 9 DISCOUNTS, REBATES AND REFUNDS

§ 9.1 Cash discounts obtained on payments made by the Contractor shall accrue to the Owner if (1) before making the payment, the Contractor included them in an Application for Payment and received payment therefor from the Owner, or (2) the Owner has deposited funds with the Contractor with which to make payments; otherwise, cash discounts shall accrue to the Contractor. Trade discounts, rebates, refunds and amounts received from sales of surplus materials and equipment shall accrue to the Owner, and the Contractor shall make provisions so that they can be secured.

§ 9.2 Amounts that accrue to the Owner in accordance with the provisions of Section 9.1 shall be credited to the Owner as a deduction from the Cost of the Work.

ARTICLE 10 SUBCONTRACTS AND OTHER AGREEMENTS

§ 10.1 Those portions of the Work that the Contractor does not customarily perform with the Contractor's own personnel shall be performed under subcontracts or by other appropriate agreements with the Contractor. .

§ 10.2 [Intentional Deleted.]

AIA Document A111™ – 1997. Copyright © 1920, 1925, 1951, 1958, 1961, 1963, 1967, 1974, 1978, 1987 and 1997 by The American Institute of Architects. All rights reserved. WARNING: This AIA® Document is protected by U.S. Copyright Law and International Treaties. Unauthorized reproduction or distribution of this AIA® Document, or any portion of it, may result in severe civil and criminal penalties, and will be prosecuted to the maximum extent possible under the law. This document was produced by AIA software at 20:09:44 on 01/09/2006 under Order No.1000179669_1 which expires on 5/15/2006, and is not for resale.
User Notes: A111-21989 ver. 1 Seismic Retrofit (11/11/05) (2441963102)

§ 10.3 Subcontracts or other agreements shall conform to the applicable payment provisions of this Agreement, and shall not be awarded on the basis of cost plus a fee without the prior consent of the Owner.

ARTICLE 11 ACCOUNTING RECORDS

The Contractor shall keep full and detailed accounts and exercise such controls as may be necessary for proper financial management under this Contract, and the accounting and control systems shall be satisfactory to the Owner. The Owner and the Owner's accountants shall be afforded access to, and shall be permitted to audit and copy, the Contractor's records, books, correspondence, instructions, drawings, receipts, subcontracts, purchase orders, vouchers, memoranda and other data relating to this Contract, and the Contractor shall preserve these for a period of three years after final payment, or for such longer period as may be required by law. If, as a result of any audit conducted by Owner, Owner determines that discrepancies exist between the actual amounts expended by Contractor and the costs charged to Owner, then in addition to all other rights and remedies Owner may have, Owner shall be entitled to an adjustment to the Guaranteed Maximum Price in an amount equal to such discrepancy, and Owner shall recover the cost of the audit from Contractor should such discrepancy vary by more than one percent (1%). Discrepancies of less than one percent (1%) shall entitle Owner, in addition to all other rights and remedies Owner may have, to an adjustment to the Guaranteed Maximum Price in an amount equal to such discrepancy, but Owner shall be responsible for the cost of the audit unless the discrepancy indicates Contractor was underpaid. In such event, any such underpayment shall be offset by the cost of the audit. Contractor shall provide Owner's auditors with access to such records during normal business hours, and Contractor authorizes the auditors to interview any of Contractor's employees who may have such information related to any such records. Contractor agrees to include a similar provision regarding Owner's right to conduct an audit in all of its Subcontracts.

ARTICLE 12 PAYMENTS

§ 12.1 PROGRESS PAYMENTS

§ 12.1.1 Based upon monthly Applications for Payment submitted to the Owner by the Contractor, including all supporting documentation required by Owner and its lender and Certificates for Payment issued by the Owner, the Owner shall make progress payments on account of the Contract Sum to the Contractor as provided below and elsewhere in the Contract Documents.

§ 12.1.2 The period covered by each Application for Payment shall be one calendar month ending on the last day of the month.

§ 12.1.3 Provided that an Application for Payment is received by the Owner not later than the 15th day of a month, the Owner shall make payment to the Contractor within thirty (30) days thereafter. If an Application for Payment is received by the Owner after the application date fixed above, payment shall be made by the Owner not later than thirty (30) days thereafter.

§ 12.1.4 With each Application for Payment, the Contractor shall submit appropriate conditional and unconditional lien releases in the form of Exhibit C attached hereto, from itself and its Subcontractors and suppliers of every tier, payrolls, petty cash accounts, receipted invoices or invoices with check vouchers attached, and any other evidence required by the Owner or Architect to demonstrate that cash disbursements already made by the Contractor on account of the Cost of the Work equal or exceed (1) progress payments already received by the Contractor; less (2) that portion of those payments attributable to the Contractor's Fee; plus (3) payrolls for the period covered by the present Application for Payment. Further, with each Application for Payment, Contractor shall certify to Owner that except for claims previously submitted in writing, as of the date of each Application for Payment, Contractor has no claims for an increase in the Guaranteed Maximum Price.

§ 12.1.5 Each Application for Payment shall be based on the most recent schedule of values submitted by the Contractor in accordance with the Contract Documents. The schedule of values shall allocate the entire Guaranteed Maximum Price among the various portions of the Work, except that the Contractor's Fee shall be shown as a single separate item. The schedule of values shall be prepared in such form and supported by such data to substantiate its accuracy as the Owner and lender may require. This schedule, unless objected to by the Owner, shall be used as a basis for reviewing the Contractor's Applications for Payment.

§ 12.1.6 Applications for Payment shall show the percentage of proper completion of each portion of the Work as of the end of the period covered by the Application for Payment. The percentage of completion shall be the lesser of

AIA Document A111™ – 1997. Copyright © 1920, 1925, 1951, 1958, 1961, 1963, 1967, 1974, 1978, 1987 and 1997 by The American Institute of Architects. All rights reserved. WARNING: This AIA® Document is protected by U.S. Copyright Law and International Treaties. Unauthorized reproduction or distribution of this AIA® Document, or any portion of it, may result in severe civil and criminal penalties, and will be prosecuted to the maximum extent possible under the law. This document was produced by AIA software at 20:09:44 on 01/09/2006 under Order No.1000179669_1 which expires on 5/16/2006, and is not for resale.
User Notes: A111-21989 ver. 1 Seismic Retrofit (11/11/05)
(2441963102)

(1) the percentage of that portion of the Work which has actually been completed; or (2) the percentage obtained by dividing (a) the expense that has actually been incurred by the Contractor on account of that portion of the Work for which the Contractor has made or intends to make actual payment prior to the next Application for Payment by (b) the share of the Guaranteed Maximum Price allocated to that portion of the Work in the schedule of values.

§ 12.1.7 Subject to other provisions of the Contract Documents, the amount of each progress payment shall be computed as follows:

.1 take that portion of the Guaranteed Maximum Price properly allocable to completed Work as determined by multiplying the percentage of completion of each portion of the Work by the share of the Guaranteed Maximum Price allocated to that portion of the Work in the schedule of values. Pending final determination of cost to the Owner of changes in the Work, amounts not in dispute shall be included as provided in Section 7.3.8 of AIA Document A201-1997;

.2 add that portion of the Guaranteed Maximum Price properly allocable to materials and equipment delivered and suitably stored at the site for subsequent incorporation in the Work, or if approved in writing and in advance by the Owner, suitably stored off the site at a location agreed upon in writing;

.3 add the Contractor's Fee.The Contractor's Fee shall be computed upon the Cost of the Work described in the two preceding Clauses at the rate stated in Section 5.1.2 or, if the Contractor's Fee is stated as a fixed sum in that Subparagraph, shall be an amount that bears the same ratio to that fixed-sum fee as the Cost of the Work in the two preceding Clauses bears to the probable Cost of the Work upon its completion, based on Exhibit "B";

.4 subtract the aggregate of previous payments made by the Owner;

.5 subtract the shortfall, if any, indicated by the Contractor in the documentation required by Section 12.1.4 to substantiate prior Applications for Payment, or resulting from errors subsequently discovered by the Owner's accountants in such documentation; and

.6 subtract amounts, if any, for which the payment was withheld as provided in Paragraph 9.5 of AIA Document A201-1997.

.7 Owner shall retain ten percent (10%) of the amount requested in each of Contractor's Application for Payment. Subject to Owner's prior written approval in each instance, which approval may be denied in Owner's sole and absolute discretion. Owner may release to Contractor retention funds withheld against certain Subcontractors designated in writing provided (i) such Subcontractors' work is accepted by Contractor as complete and in accordance with the Contract Documents, and (ii) such Subcontractors execute and deliver applicable lien releases and any warranties required by the Contract Documents. Upon receipt of such early release of retention funds from Owner, Contractor shall deliver such funds to the applicable Subcontractor(s).

§ 12.1.8 Except with the Owner's prior approval, payments to Subcontractors shall be subject to retainage of not less than ten percent (10%). The Owner and the Contractor shall agree upon a mutually acceptable procedure for review and approval of payments and retention for Subcontractors.

§ 12.1.9 In taking action on the Contractor's Applications for Payment, the Owner shall be entitled to rely on the accuracy and completeness of the information furnished by the Contractor and shall not be deemed to represent that the Owner has made a detailed examination, audit or arithmetic verification of the documentation submitted in accordance with Section 12.1.4 or other supporting data; that the Owner has made exhaustive or continuous on-site inspections or that the Owner has made examinations to ascertain how or for what purposes the Contractor has used amounts previously paid on account of the Contract. Such examinations, audits and verifications, if required by the Owner, will be performed by the Owner's accountants acting in the sole interest of the Owner.

§ 12.2 FINAL PAYMENT

§ 12.2.1 Final payment, constituting the entire unpaid balance of the Contract Sum, shall be made by the Owner to the Contractor within thirty-five (35) days after the date when:

AIA Document A111™ – 1997. Copyright © 1920, 1925, 1951, 1958, 1961, 1963, 1967, 1974, 1978, 1987 and 1997 by The American Institute of Architects. All rights reserved. WARNING: This AIA® Document is protected by U.S. Copyright Law and International Treaties. Unauthorized reproduction or distribution of this AIA® Document, or any portion of it, may result in severe civil and criminal penalties, and will be prosecuted to the maximum extent possible under the law. This document was produced by AIA software at 20:09:44 on 01/09/2006 under Order No.1000179669_1 which expires on 5/16/2006, and is not for resale.
User Notes: A111-21989 ver. 1 Seismic Retrofit (11/11/05)
(2441963102)

.1 the Contractor has fully performed the Contract (including the correction of punch-work) except for the Contractor's responsibility to correct Work as provided in Section 12.2.2 of AIA Document A201-1997, and to satisfy other requirements, if any, which extend beyond final payment (including the delivery of written one (1) year warranties signed by each Subcontractors and countersigned by Contractor);

.2 a final Certificate for Payment has been issued by the Owner;

.3 upon delivery of "As-Built" drawings on Auto CAD format for all design-build trades;

.4 a Certificate of Occupancy has been issued by the appropriate governmental agencies;

.5 a Conditional Waiver and Release of Lien Upon Final Payment has been issued by Contractor and its Subcontractors, materialmen, vendors and suppliers of all tiers; and

.6 a Notice of Completion has been recorded.

Notwithstanding Paragraph 12.2 to the contrary, within forty-five (45) days following the date of completion (as defined in California Civil Code Section 3260(c)), Owner shall release to Contractor any retention withheld from Contractor, less one hundred and fifty percent (150%) of the amount of any disputed items, including any unsettled claims and the cost of correcting incomplete or incorrect or defective Work.

§ 12.2.2 [Intentional Deleted.]

§ 12.2.3 [Intentional Deleted.]

§ 12.2.4 [Intentional Deleted.]

§ 12.2.5 [Intentional Deleted.]

ARTICLE 13 TERMINATION OR SUSPENSION

§ 13.1 The Contract may be terminated as provided in Article 14 of the General Conditions.

§ 13.2 [Intentional Deleted.]

§ 13.2.1 [Intentional Deleted.]

§ 13.2.2 [Intentional Deleted.]

§ 13.2.3 [Intentional Deleted.]

§ 13.3 [Intentional Deleted.]

§ 13.4 The Work may be suspended by the Owner as provided in Article 14 of the General Conditions.

ARTICLE 14 MISCELLANEOUS PROVISIONS

§ 14.1 Where reference is made in this Agreement to a provision AIA Document A201-1997 or another Contract Document, the reference refers to that provision as amended or supplemented by other provisions of the Contract Documents.

§ 14.2 [Intentional Deleted.]

(Insert rate of interest agreed upon, if any.)

(Usury laws and requirements under the Federal Truth in Lending Act, similar state and local consumer credit laws and other regulations at the Owner's and Contractor's principal places of business, the location of the Project and elsewhere may affect the validity of this provision. Legal advice should be obtained with respect to deletions or modifications, and also regarding requirements such as written disclosures or waivers.)

AIA Document A111™ – 1997. Copyright © 1920, 1925, 1951, 1958, 1961, 1963, 1967, 1974, 1978, 1987 and 1997 by The American Institute of Architects. All rights reserved. WARNING: This AIA® Document is protected by U.S. Copyright Law and International Treaties. Unauthorized reproduction or distribution of this AIA® Document, or any portion of it, may result in severe civil and criminal penalties, and will be prosecuted to the maximum extent possible under the law. This document was produced by AIA software at 20:09:44 on 01/09/2006 under Order No.1000179669_1 which expires on 5/16/2006, and is not for resale.
User Notes: A111-21989 ver. 1 Seismic Retrofit (11/11/05)
(2441963102)

§ 14.3 The Owner's representative is:
(Name, address and other information.)

THE STATE BAR OF CALIFORNIA
180 Howard Street
San Francisco, CA 94105-1639
Attn: Sharon Pearl-Jacobvitz

§ 14.4 The Contractor's representative is:
(Name, address and other information.)

§ 14.5 Neither the Owner's nor the Contractor's representative shall be changed without ten days' written notice to the other party.

§ 14.6 Other provisions:

§ 14.6.1 Contractor covenants that all the Work shall be done in a good and workmanlike manner and that all materials furnished and used in connection therewith shall be new and meet the criteria provided in the Contract Documents. Contractor shall cause all materials and other parts of the Work to be readily available as and when required or needed for or in connection with the construction of the Project.

§ 14.6.2 In performing its obligations under this Agreement, the Contractor shall be deemed an independent contractor and not an agent or employee of the Owner.

§ 14.6.3 Contractor agrees to make such revisions to this Agreement as may be reasonably required by Owner's lender for the Project ("Lender"), and Contractor agrees to comply with customary requirements of construction and permanent lenders which may be imposed as a condition to payments due under this Agreement. Contractor further agrees to execute a consent of the Owner's assignment of this Agreement to Owner's Lender within ten (10) days following a request therefor on such form as Lender may reasonably require.

§ 14.6.4 If any term, covenant or condition of the Contract Documents, or the application thereof to any persons or circumstance shall to any extent be invalid or unenforceable, then the remainder of the Contract Documents or the application of the term, covenant or condition to persons or circumstances other than those as to which it is held invalid or unenforceable shall not be affected thereby, and each term, covenant and condition of the Contract Documents shall be valid and enforceable to the fullest extent permitted by law.

§ 14.6.5 Any indemnity, warranty or guaranty given by the Contactor to Owner under the Contract Documents shall survive the expiration or termination of this Contract and shall be binding upon Contractor until any action thereunder is barred by the applicable Statute of Limitations.

§ 14.6.6 Owner may designate from time to time by written notice to Contractor one or more Owner's representatives or other parties to deal with Contractor on matters pertaining to administration of the provisions of the Contract Documents. However, only the Director of Real Property or such other person designated by Owner in writing, shall have the authority to approve Change Orders increasing or decreasing the Guaranteed Maximum Price or extending the Contract Time.

§ 14.6.7 The parties agree and declare that Contractor and Owner are separate and independent entities and that Contractor has full responsibility for performance of Work and direction of the work force, subject to and under the duty of Contractor to cooperate with Owner and other contractors. Contractor recognizes that in the performance of its Work it will be required to work side by side with other contractors and representatives of Owner on the job site. Owner, Contractor and /or other contractors may or may not be signatory to collective bargaining agreements of the

AIA Document A111™ – 1997. Copyright © 1920, 1925, 1951, 1958, 1961, 1963, 1967, 1974, 1978, 1987 and 1997 by The American Institute of Architects. All rights reserved. WARNING: This AIA® Document is protected by U.S. Copyright Law and International Treaties. Unauthorized reproduction or distribution of this AIA® Document, or any portion of it, may result in severe civil and criminal penalties, and will be prosecuted to the maximum extent possible under the law. This document was produced by AIA software at 20:09:44 on 01/09/2006 under Order No.1000179669_1 which expires on 5/16/2006, and is not for resale.
User Notes: A111-21989 ver. 1 Seismic Retrofit (11/11/05)

various labor organizations. Contractor agrees that should there be picketing or a threat of picketing by any labor organization at or near the site, (i) Contractor shall immediately notify Owner in writing of such circumstances and (ii) Owner may establish or require Contractor to establish a reserve gate system and may require Contractor's and Owner's employees, suppliers and subcontractors to use one or more designated gates. In that event, it shall be the affirmative obligation of Contractor as a material consideration of this Agreement to insure that its employees, suppliers and Subcontractors use only the gate(s) or other entry way(s) so designated. Notwithstanding the establishment or non-establishment of a reserve gate system, it shall be the continuing obligation of Contractor (and its Subcontractors) to properly staff the job with qualified and skilled workmen and employees without interruption or delay and without any increase to the Guaranteed Maximum Price. Contractor agrees to cooperate fully and promptly with Owner and its representatives and attorneys with respect to any labor dispute that should arise on the site, including but not limited to the giving of testimony and evidence to the agent or judge of the National Labor Relations Board or in connection with proceedings in State or Federal court. Contractor agrees to undertake or cause to be undertaken in a prompt and expeditious manner, all action involved to resolve and/or minimize the consequences of any labor dispute that should arise on the site. Contractor hereby warrants that it is not now nor will Contractor be delinquent in the payment or reporting to any labor management benefit trust fund and further warrants that Contractor is not now nor will Contractor appear on any delinquency list published by any labor management benefit trust fund. Contractor indemnifies, defends and holds Owner entirely harmless from and against all costs, claims, liabilities, damages, delays, losses and expenses (including attorneys' fees and costs) arising directly or indirectly from Contractor's failure to comply with the provisions of this Subparagraph 14.6.7.

§ 14.6.8 The Contract Documents constitute the entire agreement between the parties hereto with respect to the matters covered thereby. All prior negotiations, representations and agreements with respect thereto not incorporated in such Contract Documents are superseded by this Agreement. This Agreement can be modified or amended only by a document duly executed on behalf of the parties hereto.

§ 14.6.9 Contractor represents and warrants that Contractor holds a license, permit, other special license to perform the Work included in this Agreement , as required by law, or employs or works under the general supervision of the holder of such license, permit or special license, and shall keep and maintain all such licenses, permits and special licenses in good standing and in full force and effect at all times while Contractor is performing Work under this Agreement.

§ 14.6.10 Notwithstanding any other provision of this Agreement to the contrary, no general partner, limited partner, member, officer, shareholder, director, or other representative of Owner or of any general partner or limited partner of Owner (each an "Individual") shall have any personal liability for the performance of any obligations, or in respect of any liability of Owner under this Agreement, and no monetary or other judgment shall be sought or enforced against any such Individuals or their assets, all such personal liability being expressly waived by Contractor. Further, the covenants and obligations contained in this Agreement on the part of Owner shall be covenants and obligations of the entity comprising Owner only, and not of the Individuals. No Individual shall be individually liable for breach of any covenant or obligation of Owner, and no recourse shall be had against the assets of any Individual for payment of any sums due, or enforcement of any other relief, based upon any claim made by Contractor for breach of any Owner's covenants or obligations.

§ 14.6.11 Any controversy between Owner and Contractor arising out of the Contract Documents shall, at Owner's election, be heard by a reference pursuant to the provisions of California Code of Civil Procedure Section 638 et seq. Owner and Contractor shall agree on a single referee who shall then try all issues, whether of fact or law, and report a finding and judgment thereon. If Owner and Contractor are unable to agree upon a referee, either party may seek to have one appointed, pursuant to California Code of Civil Procedure Section 640. The cost of such proceeding shall initially be borne equally by Owner and Contractor. However, the prevailing party in such proceeding shall be entitled, in addition to all other costs, to recover their one-half (1/2) contribution for the cost of the reference as an item of damage or recoverable costs. If Owner does not elect to have a dispute resolved by reference, then such dispute shall be decided by a court of competent jurisdiction; provided, however, the Work shall be continuous during the pendency of any dispute, any judicial reference proceeding or any court proceeding, and Owner agrees to make payment to Contractor for any items of Work not in dispute.

§ 14.6.12 In the event of any litigation between Owner and Contractor, including a reference procedure, involving or arising out of this Agreement, the prevailing party shall be entitled to recover its reasonable expenses, attorneys' fees and costs incurred. In addition to the award of attorneys' fees, the prevailing party in any such lawsuit or

AIA Document A111™ – 1997. Copyright © 1920, 1925, 1951, 1958, 1961, 1963, 1967, 1974, 1978, 1987 and 1997 by The American Institute of Architects. All rights reserved. WARNING: This AIA® Document is protected by U.S. Copyright Law and International Treaties. Unauthorized reproduction or distribution of this AIA® Document, or any portion of it, may result in severe civil and criminal penalties, and will be prosecuted to the maximum extent possible under the law. This document was produced by AIA software at 20:09:44 on 01/09/2006 under Order No.1000179669_1 which expires on 5/16/2006, and is not for resale.
User Notes: A111-21989 ver. 1 Seismic Retrofit (11/11/05)

(2441963102)

proceeding will be entitled to its attorneys' fees incurred in any post-judgment proceedings to collect or enforce the judgment. This provision is separate and several and shall survive the merger of this Agreement into any judgment on this Agreement. This provision shall survive the expiration or the termination of this Agreement.

§ 14.6.13 Owner and Contractor, respectively, bind themselves, their partners, successors, assigns and legal representatives, to the other party to the Contract Documents and to the partners, successors, assigns and legal representatives of such other party with respect to all covenants of the Contract Documents. Contactor shall not assign, transfer, or sublet in whole or in part its interest under the Contract Documents without the prior written consent of Owner.

§ 14.6.14 Contractor shall check all materials, equipment and labor entering into the Work and shall keep such full and detailed accounts as may be necessary for proper financial management under this Agreement, and the system shall be satisfactory to Owner. Owner shall be afforded access to all Contractor's records, books, correspondence, instructions, drawings, receipts, vouchers, memoranda and similar data relating to the Guaranteed Maximum Price, and Contractor shall preserve all such records for a period of three (3) years, or for such longer period as may be required by law, after the final payment.

§ 14.6.15 In performing the Work, Contractor shall determine the applicability of, and shall comply with, all applicable laws, statutes, ordinances, codes and regulations affecting the Project, including any prevailing wage requirements.

§ 14.6.16 Contractor agrees that throughout the course of construction of the Work, Contractor will continue to develop "value engineering" alternatives to the Work, and shall promptly report to the Owner the result of such "value engineering". If Owner, in its sole and absolute discretion, approves such value engineering proposal, then Owner may implement such proposal by issuing a deductive Change Order in accordance with the terms of this Agreement.

§ 14.6.17 Contractor shall treat all information, discussions, work papers, drawings, memoranda, and all materials relating to the Project and all information supplied to Contractor by Owner as strictly confidential and proprietary information of Owner. Contractor shall not permit its release to other parties or make any public announcement or publicity releases, and such information shall not be used or discussed by Contractor, except as required to complete the Work, without Owner's prior written approval in each instance. Contractor shall also require Subcontractors and vendors to comply with this requirement. Owner shall retain the absolute right to enjoin or obtain other appropriate relief in connection with unauthorized disclosure in violation of this Subparagraph 14.6.17.

§ 14.6.18 Both Owner and Contractor have, with the assistance of their respective counsel, actively negotiated the terms and provisions contained in this Agreement. Therefore, the parties waive the effect of any statutory or common law provision which construes ambiguities in a contract against the party that drafted the contract.

§ 14.6.19 CONTRACTORS ARE REQUIRED BY LAW TO BE LICENSED AND REGULATED BY THE CONTRACTORS' STATE LICENSE BOARD WHICH HAS JURISDICTION TO INVESTIGATE COMPLAINTS AGAINST CONTRACTORS IF A COMPLAINT REGARDING A PATENT ACT OR OMISSION IS FILED WITHIN FOUR (4) YEARS OF THE DATE OF THE ALLEGED VIOLATION. A COMPLAINT REGARDING A LATENT ACT OR OMISSION PERTAINING TO STRUCTURAL DEFECTS MUST BE FILED WITHIN TEN (10) YEARS OF THE DATE OF THE ALLEGED VIOLATION. ANY QUESTIONS CONCERNING A CONTRACTOR MAY BE REFERRED TO THE REGISTRAR, CONTRACTORS' STATE LICENSE BOARD, P.O. BOX 26000, SACRAMENTO, CALIFORNIA 95826,

§ 14.6.20 Contractor's California License No. 210639.

§ 14.6.21 Construction Lender's Address (if any): None

§14.6.22 During the performance of this Agreement, Contractor will not unlawfully discriminate against any employee or applicant for employment because of race, religion, color, national origin, ancestry, physical handicap, medical condition, marital status, age (over 40), sex or sexual orientation. Contractor will comply with the provisions of the Fair Employment and Housing Act (Government Code section 12900 et seq.) and applicable regulations promulgated thereunder (California Administrative Code, Title 2, section 7285.0 et seq.). Contractor will

AIA Document A111™ – 1997. Copyright © 1920, 1925, 1951, 1958, 1961, 1963, 1967, 1974, 1978, 1987 and 1997 by The American Institute of Architects. All rights reserved. WARNING: This AIA® Document is protected by U.S. Copyright Law and International Treaties. Unauthorized reproduction or distribution of this AIA® Document, or any portion of it, may result in severe civil and criminal penalties, and will be prosecuted to the maximum extent possible under the law. This document was produced by AIA software at 20:09:44 on 01/09/2006 under Order No.1000179669_1 which expires on 5/16/2006, and is not for resale.
User Notes: A111-21989 ver. 1 Seismic Retrofit (11/11/05)

include the nondiscrimination and compliance provisions of this clause in all subcontracts to perform Work under this Agreement.

§14.6.23 Contractor shall coordinate the Work with the work and services performed by Owner's separate contractors and consultants. Further, Contractor acknowledges that since the Project will be occupied by the State Bar, its employees and its various tenants during the performance of the Work, Contractor shall (i) schedule and perform the Work in such a manner which minimizes any interference with the occupants of the Project, (ii) take such precautions as necessary to protect the State Bar, its employees and tenants form the performance of the Work, and (iii) perform daily clean-up of the Project.

§14.6.24 If Contractor is performing work or services for Owner pursuant to any other agreement, then (i) a breach or default of Contractor thereunder shall also be a breach or default of Contractor under this Contract, and (ii) a breach or default by Contractor of this Contract shall be deemed a breach or default of Contractor pursuant to such other agreement.

§14.6.25 The Project shall be a "union only" project.

§14.6.26 Except with Owner's knowledge and prior written consent, Contractor shall not (1) accept trade discounts, (2) have a financial interest, or (3) undertake any activity or employment or accept any contribution, if it would reasonably appear that such activity, employment, interest or contribution could compromise Contractor's professional judgment, the prosecution of the Work, or prevent Contractor from serving the best interests of Owner. Owner, as a public corporation, is subject to governmental conflict of interest codes (see California Business and Professions Code section 6036, a California Government Code sections 82019 and 82048). Contractor shall familiarize itself with Owner's conflict of interest codes and avoid any and all situations that could result in violation of the provisions of said codes. Contractor shall also take such action as necessary to prevent any violation of Owner's conflict of interest codes by any Subcontractor, Sub-subcontractor, equipment or material supplier of every tier.

§14.6.27 All Work must be scheduled and performed during the hours of 5:00pm to 2:00am, Monday through Friday, unless Contractor obtains Owner's prior written approval in each instance to perform Work at any other time.

ARTICLE 15 ENUMERATION OF CONTRACT DOCUMENTS

§ 15.1 The Contract Documents, except for Modifications issued after execution of this Agreement, are enumerated as follows:

§ 15.1.1 The Agreement is this executed 1997 edition of the Standard Form of Agreement Between Owner and Contractor, AIA Document A111-1997, as modified.

§ 15.1.2 The General Conditions are the 1997 edition of the General Conditions of the Contract for Construction, AIA Document A201-1997, as modified.

§ 15.1.3 The Supplementary and other Conditions of the Contract are those contained in the Project Manual dated , and are as follows: See Exhibit D.

Document	Title	Pages

See Exhibit D.

§ 15.1.4 The Specifications are those contained in the Project Manual dated as in Section 15.1.3, and are as follows:
(Either list the Specifications here or refer to an exhibit attached to this Agreement.)

Title of Specifications exhibit:

See Exhibit D.

§ 15.1.5 The Drawings are as follows, and are dated unless a different date is shown below:
(Either list the Drawings here or refer to an exhibit attached to this Agreement.)

AIA Document A111™ – 1997. Copyright © 1920, 1925, 1951, 1958, 1961, 1963, 1967, 1974, 1978, 1987 and 1997 by The American Institute of Architects. All rights reserved. WARNING: This AIA® Document is protected by U.S. Copyright Law and International Treaties. Unauthorized reproduction or distribution of this AIA® Document, or any portion of it, may result in severe civil and criminal penalties, and will be prosecuted to the maximum extent possible under the law. This document was produced by AIA software at 20:09:44 on 01/09/2006 under Order No.1000179669_1 which expires on 5/16/2006, and is not for resale.
User Notes: A111-21989 ver. 1 Seismic Retrofit (11/11/05)

Title of Drawings exhibit:

See Exhibit D.

§ 15.1.6 The Addenda, if any, are as follows:

Number	Date	Pages

Portions of Addenda relating to bidding requirements are not part of the Contract Documents unless the bidding requirements are also enumerated in this Article 15.

§ 15.1.7 Other Documents, if any, forming part of the Contract Documents are as follows:
(List here any additional documents, such as a list of alternates that are intended to form part of the Contract Documents. AIA Document A201-1997 provides that bidding requirements such as advertisement or invitation to bid, Instructions to Bidders, sample forms and the Contractor's bid are not part of the Contract Documents unless enumerated in this Agreement. They should be listed here only if intended to be part of the Contract Documents.)

Exhibit A - Progress Schedule
Exhibit B - Guaranteed Maximum Price Cost Breakdown
Exhibit C - Lien Waivers
Exhibit D - The Contract Documents
Exhibit E - Insurance Requirements

ARTICLE 16 INSURANCE AND BONDS
(List required limits of liability for insurance and bonds. AIA Document A201-1997 gives other specific requirements for insurance and bonds.)

See Exhibit E.

Type of Insurance	Limit of liability ($ 0.00)

This Agreement is entered into as of the day and year first written above and is executed in at least three original copies, of which one is to be delivered to the Contractor, one to the Architect for use in the administration of the Contract, and the remainder to the Owner.

THE STATE BAR OF CALIFORNIA

By:

OWNER *(Signature)*

(Printed name and title)

CONSTRUCTION COMPANY

CONTRACTOR *(Signature)*

(Printed name and title)

AIA Document A111™ – 1997. Copyright © 1920, 1925, 1951, 1958, 1961, 1963, 1967, 1974, 1978, 1987 and 1997 by The American Institute of Architects. All rights reserved. WARNING: This AIA® Document is protected by U.S. Copyright Law and International Treaties. Unauthorized reproduction or distribution of this AIA® Document, or any portion of it, may result in severe civil and criminal penalties, and will be prosecuted to the maximum extent possible under the law. This document was produced by AIA software at 20:09:44 on 01/09/2006 under Order No.1000179669_1 which expires on 5/16/2006, and is not for resale.
User Notes: A111-21989 ver. 1 Seismic Retrofit (11/11/05)

EXHIBIT A TO STANDARD FORM OF AGREEMENT

SCHEDULE

EXHIBIT B TO STANDARD FORM OF

AGREEMENT BETWEEN OWNER AND CONTRACTOR

GUARANTEED MAXIMUM PRICE BREAKDOWN

1. Guaranteed Maximum Price. The Guaranteed Maximum Price is .

2. Contractor's Fee. The Contractor's Fee shall be (%) of the Cost of the Work. The Contractor's Fee shall not be adjusted for any reason except as specifically provided below:

(a) Upon completion of the Work, the Contractor's Fee shall be reduced by percent (%) of the amount of any unused Allowance items.

(b) Contractor's Fee shall not be adjusted due to changes in the Work except as follows: With the final payment, Contractor shall receive an additional fee of percent (%) of the net positive amount of all additive and deductive Change Orders. In no event shall the Contractor's Fee be reduced or increased in the event of a negative net amount.

(c) Contractor's Fee shall not be adjusted, nor shall Contractor receive any additional fee, due to Contractor's withdrawing funds from the contingency.

3. Form of Application for Payment. The AIA G702 form shall be the form of Application for Payment, and each monthly Application for Payment shall be notarized by Contractor.

4. Contingency. The Guaranteed Maximum Price includes a contingency equal to five percent (5%) of the estimated Cost of the Work. Funds may not be withdrawn from the contingency without Owner's prior written consent, which consent shall not be unreasonably withheld. The parties agree that the contingency may be used to fund items of the Work that are (i) inferred or intended by the Contract Documents though not specifically represented in such Contract Documents, (ii) the result of concealed conditions, (iii) otherwise approved by Owner in writing, or (iv) omitted from the bids of any Subcontractor, provided such items of the Work would otherwise be a Cost of the Work in accordance with Article 7, and not excluded from the contingency in accordance with the following sentence. In no event shall contingency funds be available for the following: (1) costs not to be reimbursed in accordance with Article 8 of this Agreement; (2) costs due to a Scope Change in the Work by Owner; and (3) the correction of Work rejected by Owner or Architect as not being in conformance with the Contract Documents. Contractor agrees to provide Owner with a monthly report indicating the status of the contingency.

EXHIBIT C TO STANDARD FORM OF AGREEMENT BETWEEN OWNER AND CONTRACTOR

LIEN RELEASE FORMS.

CONDITIONAL WAIVER AND RELEASE UPON PROGRESS PAYMENT

Upon receipt by the undersigned of a check from _____ (Maker of Check) in the sum of $_____ (Amount of Check) payable to _____ (Payee or Payees of Check), and when the check has been properly endorsed and has been paid by the bank upon which it is drawn, this document shall become effective to release any mechanic's lien, stop notice, or bond right the undersigned has on the job of _____ (Owner), located at _____ (Job Description) to the following extent. This release covers a progress payment for labor, services, equipment, or material furnished to _____ (Your Customer) through _____ (Date) only, and does not cover any retentions retained before or after the release date; extras furnished before the release date for which payment has not been received; extras or items furnished after the release date. Rights based upon work performed or items furnished under a written change order which has been fully executed by the parties prior to the release date are covered by this release unless specifically reserved by the claimant in this release. This release of any mechanic's lien, stop notice, or bond right shall not otherwise affect the contract rights, including rights between parties to the contract based upon a rescission, abandonment, or breach of the contract, or the right of the undersigned to recover compensation for furnished labor, services, equipment or material covered by this release if that furnished labor, services, equipment, or material was not compensated by the progress payment. Before any recipient of this document relies on it, said party should verify evidence of payment to the undersigned.

Date:_____ _____

(Company Name)

By:_____

(Title)

UNCONDITIONAL WAIVER AND RELEASE UPON PROGRESS PAYMENT

The undersigned has been paid and has received a progress payment in the sum of $_____ for labor, services, equipment, or material furnished to _____ (Your Customer) on the job of _____ (Owner) located at _____ (Job Description), and does hereby release any mechanic's lien, stop notice, or bond right that the undersigned has on the above referenced job to the following extent. This release covers a progress payment for labor, services, equipment, or materials furnished to _____ (Your Customer) through _____ (Date) only, and does not cover any retentions retained before or after the release date; extras furnished before the release date for which payment has not been received; extras or items furnished after the release date. Rights based upon work performed or items furnished under a written change order which has been fully executed by the parties prior to the release date are covered by this release unless specifically reserved by the claimant in this release. This release of any mechanic's lien, stop notice, or bond right shall not otherwise affect the contract rights, including rights between parties to the contract based upon a rescission, abandonment, or breach of the contract, or the right of the undersigned to recover compensation for furnished labor, services, equipment, or material covered by this release if that furnished labor, services, equipment, or material was not compensated by the progress payment.

Dated:_____

_____
(Company Name)

By:_____
(Title)

NOTICE: THIS DOCUMENT WAIVES RIGHTS UNCONDITIONALLY AND STATES THAT YOU HAVE BEEN PAID FOR GIVING UP THOSE RIGHTS. THIS DOCUMENT IS ENFORCEABLE AGAINST YOU IF YOU SIGN IT, EVEN IF YOU HAVE NOT BEEN PAID. IF YOU HAVE NOT BEEN PAID, USE A CONDITIONAL RELEASE FORM.

STATE OF CALIFORNIA)
) ss:
COUNTY OF _____)

On _____, _____, before me, the undersigned, a Notary Public in and for said County and State, personally appeared _____
_____,
personally known to me (or proved to me on the basis of satisfactory evidence) to be the person(s) whose name(s) is/are subscribed to the within instrument and acknowledged to me that he/she/they executed the same in his/her/their authorized capacity(ies), and that by his/her/their signature(s) on the instrument the person(s), or the entity upon behalf of which the person(s) acted, executed the instrument.

WITNESS my hand and official seal.

_____
Notary Public

CONDITIONAL WAIVER AND RELEASE UPON FINAL PAYMENT

Upon receipt by the undersigned of a check from _____ (Maker of Check) in the sum of $_____ (Amount of Check) payable to _____ (Payee or Payees of Check) and when the check has been properly endorsed and has been paid by the bank upon which it is drawn, this document shall become effective to release any mechanic's lien, stop notice, or bond right the undersigned has on the job of _____ (Owner) located at _____ (Job Description).

This release covers the final payment to the undersigned for all labor, services, equipment or material furnished on the job, except for disputed claims for additional work in the amount of $_____.

Before any recipient of this document relies on it, the party should verify evidence of payment to the undersigned.

Dated:_____

_____
(Company Name)

By:_____
(Title)

UNCONDITIONAL WAIVER AND RELEASE UPON FINAL PAYMENT

The undersigned has been paid in full for all labor, services, equipment or material furnished to _____ _____ (Your Customer) on the job of _____ (Owner) located at _____ (Job Description) and does hereby waive and release any right to a mechanic's lien, stop notice, or any right against a labor and material bond on the job, except for disputed claims for extra work in the amount of $_____.

Dated:_____

_____
(Company Name)

By:_____

NOTICE: THIS DOCUMENT WAIVES RIGHTS UNCONDITIONALLY AND STATES THAT YOU HAVE BEEN PAID FOR GIVING UP THOSE RIGHTS. THIS DOCUMENT IS ENFORCEABLE AGAINST YOU IF YOU SIGN IT, EVEN IF YOU HAVE NOT BEEN PAID. IF YOU HAVE NOT BEEN PAID, USE A CONDITIONAL RELEASE FORM.

STATE OF CALIFORNIA)
) ss:
COUNTY OF _____)

On _____, _____, before me, the undersigned, a Notary Public in and for said County and State, personally appeared _____
_____,
personally known to me (or proved to me on the basis of satisfactory evidence) to be the person(s) whose name(s) is/are subscribed to the within instrument and acknowledged to me that he/she/they executed the same in his/her/their authorized capacity(ies), and that by his/her/their signature(s) on the instrument the person(s), or the entity upon behalf of which the person(s) acted, executed the instrument.

WITNESS my hand and official seal.

_____
Notary Public

5. Savings. If upon final completion of the Work, the Cost of the Work (including any unspent allowance items and contingency) plus the Contractor's Fee is less than the Guaranteed Maximum Price (such difference hereinafter referred to as "Savings"), then with the Final Payment, Contractor shall receive an additional fee equal to zero percent (0%) of the Savings.

6. General Conditions Maximum. The Contractor's general conditions costs for this Project shall not exceed Dollars ($) (the "General Conditions Maximum"). In the event that Contractor's general conditions costs exceed the General Conditions Maximum Contractor shall pay such excess costs from the following: first, from the Contractor's Fee; and second, from its own funds, and Owner shall not be required to pay any part of such excess costs. Contractor's general conditions costs shall be paid in equal installments during the performance of the Work.

7. Cost Breakdown. Attached hereto is a cost breakdown of the Guaranteed Maximum Price.

8. Qualifications and Assumptions.

EXHIBIT E TO STANDARD FORM OF

AGREEMENT BETWEEN OWNER AND CONTRACTOR

INSURANCE REQUIREMENTS

(In addition to Article 11 of the General Conditions)

A. Contractor shall obtain the following insurance policies:

1. Workers' Compensation and Employers' Liability Insurance for all employees at the Project, as follows:

Coverage A (Workers' Compensation) - Statutory

Coverage B (Employers' Liability) - $1,000,000 each accident

Broad Form All States Endorsement

Voluntary Compensation Endorsement

Such policies shall include a waiver of subrogation in favor of Owner.

2. Commercial General Liability, Automobile Liability and Umbrella Liability coverage with respect to claims, losses and liabilities which may result directly or indirectly from the performance or nonperformance of the Contract whether such performance or nonperformance be by Contractor or by any of Contractor's Subcontractors, of any tier, and their employees, agents or assignees, or by anyone directly or indirectly employed by any of them or by any one for whose acts any of them may be liable, with limits of not less than Five Million Dollars ($5,000,000) specific to this Project (either achieved by specific policy or by endorsement), combined single limit bodily injury and property damage liability per occurrence (written on an OCCURRENCE basis), or current limit presently carried by Contractor, whichever is greater. Such coverage shall include, but not be limited to:

(a) Premises and Operations coverage, with XCU exclusions, if any, deleted;

(b) Products/Completed Operations coverage, which Contractor shall maintain in effect on an annual renewal basis for at least two (2) years following final completion and acceptance of the Work by Owner;

(c) Owner's and Contractor's Protective Liability coverage;

(d) Owned, Non-owned, Hired, Leased or Rented Automobile Liability coverage;

DRAFT

AIA® Document A201™ – 1997

General Conditions of the Contract for Construction

for the following PROJECT:
(Name and location or address):

THE OWNER:
(Name and address):

THE STATE BAR OF CALIFORNIA

THE ARCHITECT:
(Name and address):

ADDITIONS AND DELETIONS:
The author of this document has added information needed for its completion. The author may also have revised the text of the original AIA standard form. An *Additions and Deletions Report* that notes added information as well as revisions to the standard form text is available from the author and should be reviewed. A vertical line in the left margin of this document indicates where the author has added necessary information and where the author has added to or deleted from the original AIA text.

This document has important legal consequences. Consultation with an attorney is encouraged with respect to its completion or modification.

This document has been approved and endorsed by The Associated General Contractors of America

TABLE OF ARTICLES

1 GENERAL PROVISIONS

2 OWNER

3 CONTRACTOR

4 ADMINISTRATION OF THE CONTRACT

5 SUBCONTRACTORS

6 CONSTRUCTION BY OWNER OR BY SEPARATE CONTRACTORS

7 CHANGES IN THE WORK

8 TIME

9 PAYMENTS AND COMPLETION

10 PROTECTION OF PERSONS AND PROPERTY

11 INSURANCE AND BONDS

12 UNCOVERING AND CORRECTION OF WORK

13 MISCELLANEOUS PROVISIONS

14 TERMINATION OR SUSPENSION OF THE CONTRACT

AIA Document A201™ – 1997. Copyright © 1911, 1915, 1918, 1925, 1937, 1951, 1958, 1961, 1963, 1966, 1970, 1976, 1987 and 1997 by The American Institute of Architects. All rights reserved. WARNING: This AIA® Document is protected by U.S. Copyright Law and International Treaties. Unauthorized reproduction or distribution of this AIA® Document, or any portion of it, may result in severe civil and criminal penalties, and will be prosecuted to the maximum extent possible under the law. This document was produced by AIA software at 20:17:08 on 01/09/2006 under Order No.1000179669_1 which expires on 5/16/2006, and is not for resale.
User Notes: A201-21989 ver. 1 Seismic Retrofit (11/11/05) (1304079764)

INDEX
(Numbers and Topics in Bold are Section Headings)

Acceptance of Nonconforming Work
9.6.6, 9.9.3, **12.3**
Acceptance of Work
9.6.6, 9.8.2, 9.9.3, 9.10.1, 9.10.3, 12.3
Access to Work
3.16, 6.2.1, 12.1
Accident Prevention
4.2.3, 10
Acts and Omissions
3.2, 3.3.2, 3.12.8, 3.18, 4.2.3, 4.3.8, 4.4.1, 8.3.1,
9.5.1, 10.2.5, 13.4.2, 13.7, 14.1
Addenda
1.1.1, 3.11
Additional Costs, Claims for
4.3.4, 4.3.5, 4.3.6, 6.1.1, 10.3
Additional Inspections and Testing
9.8.3, 12.2.1, 13.5
Additional Time, Claims for
4.3.4, 4.3.7, 8.3.2
ADMINISTRATION OF THE CONTRACT
3.1.3, **4**, 9.4, 9.5
Advertisement or Invitation to Bid
1.1.1
Aesthetic Effect
4.2.13, 4.5.1
Allowances
3.8
All-risk Insurance
11.4.1.1
Applications for Payment
4.2.5, 7.3.8, 9.2, **9.3**, 9.4, 9.5.1, 9.6.3, 9.7.1, 9.8.5,
9.10, 11.1.3, 14.2.4, 14.4.3
Approvals
2.4, 3.1.3, 3.5, 3.10.2, 3.12, 4.2.7, 9.3.2, 13.4.2, 13.5
Arbitration
4.3.3, 4.4, 4.5.1, 4.5.2, **4.6**, 8.3.1, 9.7.1, 11.4.9,
11.4.10
Architect
4.1
Architect, Definition of
4.1.1
Architect, Extent of Authority
2.4, 3.12.7, 4.2, 4.3.6, 4.4, 5.2, 6.3, 7.1.2, 7.3.6, 7.4,
9.2, 9.3.1, 9.4, 9.5, 9.8.3, 9.10.1, 9.10.3, 12.1, 12.2.1,
13.5.1, 13.5.2, 14.2.2, 14.2.4
Architect, Limitations of Authority and
Responsibility
2.1.1, 3.3.3, 3.12.4, 3.12.8, 3.12.10, 4.1.2, 4.2.1,
4.2.2, 4.2.3, 4.2.6, 4.2.7, 4.2.10, 4.2.12, 4.2.13, 4.4,
5.2.1, 7.4, 9.4.2, 9.6.4, 9.6.6
Architect's Additional Services and Expenses
2.4, 11.4.1.1, 12.2.1, 13.5.2, 13.5.3, 14.2.4
Architect's Administration of the Contract
3.1.3, **4.2**, 4.3.4, 4.4, 9.4, 9.5
Architect's Approvals
2.4, 3.1.3, 3.5.1, 3.10.2, 4.2.7
Architect's Authority to Reject Work
3.5.1, 4.2.6, 12.1.2, 12.2.1
Architect's Copyright
1.6
Architect's Decisions
4.2.6, 4.2.7, 4.2.11, 4.2.12, 4.2.13, 4.3.4, 4.4.1, 4.4.5,
4.4.6, 4.5, 6.3, 7.3.6, 7.3.8, 8.1.3, 8.3.1, 9.2, 9.4,
9.5.1, 9.8.4, 9.9.1, 13.5.2, 14.2.2, 14.2.4
Architect's Inspections
4.2.2, 4.2.9, 4.3.4, 9.4.2, 9.8.3, 9.9.2, 9.10.1, 13.5
Architect's Instructions
3.2.3, 3.3.1, 4.2.6, 4.2.7, 4.2.8, 7.4.1, 12.1, 13.5.2
Architect's Interpretations
4.2.11, 4.2.12, 4.3.6
Architect's Project Representative
4.2.10
Architect's Relationship with Contractor
1.1.2, 1.6, 3.1.3, 3.2.1, 3.2.2, 3.2.3, 3.3.1, 3.4.2, 3.5.1,
3.7.3, 3.10, 3.11, 3.12, 3.16, 3.18, 4.1.2, 4.1.3, 4.2,
4.3.4, 4.4.1, 4.4.7, 5.2, 6.2.2, 7, 8.3.1, 9.2, 9.3, 9.4,
9.5, 9.7, 9.8, 9.9, 10.2.6, 10.3, 11.3, 11.4.7, 12,
13.4.2, 13.5
Architect's Relationship with Subcontractors
1.1.2, 4.2.3, 4.2.4, 4.2.6, 9.6.3, 9.6.4, 11.4.7
Architect's Representations
9.4.2, 9.5.1, 9.10.1
Architect's Site Visits
4.2.2, 4.2.5, 4.2.9, 4.3.4, 9.4.2, 9.5.1, 9.9.2, 9.10.1,
13.5
Asbestos
10.3.1
Attorneys' Fees
3.18.1, 9.10.2, 10.3.3
Award of Separate Contracts
6.1.1, 6.1.2
Award of Subcontracts and Other Contracts for
Portions of the Work
5.2
Basic Definitions
1.1
Bidding Requirements
1.1.1, 1.1.7, 5.2.1, 11.5.1
Boiler and Machinery Insurance
11.4.2
Bonds, Lien
9.10.2
Bonds, Performance, and Payment
7.3.6.4, 9.6.7, 9.10.3, 11.4.9, 11.5
Building Permit
3.7.1
Capitalization
1.3
Certificate of Substantial Completion

AIA Document A201™ – 1997. Copyright © 1911, 1915, 1918, 1925, 1937, 1951, 1958, 1961, 1963, 1966, 1970, 1976, 1987 and 1997 by The American Institute of Architects. All rights reserved. WARNING: This AIA® Document is protected by U.S. Copyright Law and International Treaties. Unauthorized reproduction or distribution of this AIA® Document, or any portion of it, may result in severe civil and criminal penalties, and will be prosecuted to the maximum extent possible under the law. This document was produced by AIA software at 20:17:08 on 01/09/2006 under Order No.1000179669_1 which expires on 5/16/2006, and is not for resale.
User Notes: A201-21989 ver. 1 Seismic Retrofit (11/11/05) (1304079764)

9.8.3, 9.8.4, 9.8.5
Certificates for Payment
4.2.5, 4.2.9, 9.3.3, **9.4**, 9.5, 9.6.1, 9.6.6, 9.7.1, 9.10.1, 9.10.3, 13.7, 14.1.1.3, 14.2.4
Certificates of Inspection, Testing or Approval
13.5.4
Certificates of Insurance
9.10.2, 11.1.3
Change Orders
1.1.1, 2.4.1, 3.4.2, 3.8.2.3, 3.11.1, 3.12.8, 4.2.8, 4.3.4, 4.3.9, 5.2.3, 7.1, **7.2**, 7.3, 8.3.1, 9.3.1.1, 9.10.3, 11.4.1.2, 11.4.4, 11.4.9, 12.1.2
Change Orders, Definition of
7.2.1
CHANGES IN THE WORK
3.11, 4.2.8, **7**, 8.3.1, 9.3.1.1, 11.4.9
Claim, **Definition** of
4.3.1
Claims and Disputes
3.2.3, **4.3**, 4.4, 4.5, 4.6, 6.1.1, 6.3, 7.3.8, 9.3.3, 9.10.4, 10.3.3
Claims and Timely Assertion of Claims
4.6.5
Claims for Additional Cost
3.2.3, 4.3.4, **4.3.5**, 4.3.6, 6.1.1, 7.3.8, 10.3.2
Claims for Additional Time
3.2.3, 4.3.4, **4.3.7**, 6.1.1, 8.3.2, 10.3.2
Claims for Concealed or Unknown Conditions
4.3.4
Claims for Damages
3.2.3, 3.18, 4.3.10, 6.1.1, 8.3.3, 9.5.1, 9.6.7, 10.3.3, 11.1.1, 11.4.5, 11.4.7, 14.1.3, 14.2.4
Claims Subject to Arbitration
4.4.1, 4.5.1, 4.6.1
Cleaning Up
3.15, 6.3
Commencement of Statutory Limitation Period
13.7
Commencement of the Work, Conditions Relating to
2.2.1, 3.2.1, 3.4.1, 3.7.1, 3.10.1, 3.12.6, 4.3.5, 5.2.1, 5.2.3, 6.2.2, 8.1.2, 8.2.2, 8.3.1, 11.1, 11.4.1, 11.4.6, 11.5.1
Commencement of the Work, Definition of
8.1.2
Communications Facilitating Contract Administration
3.9.1, **4.2.4**
Completion, Conditions Relating to
1.6.1, 3.4.1, 3.11, 3.15, 4.2.2, 4.2.9, 8.2, 9.4.2, 9.8, 9.9.1, 9.10, 12.2, 13.7, 14.1.2
COMPLETION, PAYMENTS AND
9
Completion, Substantial
4.2.9, 8.1.1, 8.1.3, 8.2.3, 9.4.2, 9.8, 9.9.1, 9.10.3, 9.10.4.2, 12.2, 13.7
Compliance with Laws
1.6.1, 3.2.2, 3.6, 3.7, 3.12.10, 3.13, 4.1.1, 4.4.8, 4.6.4, 4.6.6, 9.6.4, 10.2.2, 11.1, 11.4, 13.1, 13.4, 13.5.1, 13.5.2, 13.6, 14.1.1, 14.2.1.3
Concealed or Unknown Conditions
4.3.4, 8.3.1, 10.3
Conditions of the Contract
1.1.1, 1.1.7, 6.1.1, 6.1.4
Consent, Written
1.6, 3.4.2, 3.12.8, 3.14.2, 4.1.2, 4.3.4, 4.6.4, 9.3.2, 9.8.5, 9.9.1, 9.10.2, 9.10.3, 11.4.1, 13.2, 13.4.2
CONSTRUCTION BY OWNER OR BY SEPARATE CONTRACTORS
1.1.4, **6**
Construction Change Directive, Definition of
7.3.1
Construction Change Directives
1.1.1, 3.12.8, 4.2.8, 4.3.9, 7.1, **7.3**, 9.3.1.1
Construction Schedules, Contractor's
1.4.1.2, 3.10, 3.12.1, 3.12.2, 4.3.7.2, 6.1.3
Contingent Assignment of Subcontracts
5.4, 14.2.2.2
Continuing Contract Performance
4.3.3
Contract, Definition of
1.1.2
CONTRACT, TERMINATION OR SUSPENSION OF THE
5.4.1.1, 11.4.9, **14**
Contract Administration
3.1.3, 4, 9.4, 9.5
Contract Award and Execution, Conditions Relating to
3.7.1, 3.10, 5.2, 6.1, 11.1.3, 11.4.6, 11.5.1
Contract Documents, The
1.1, 1.2
Contract Documents, Copies Furnished and Use of
1.6, 2.2.5, 5.3
Contract Documents, Definition of
1.1.1
Contract Sum
3.8, 4.3.4, 4.3.5, 4.4.5, 5.2.3, 7.2, 7.3, 7.4, **9.1**, 9.4.2, 9.5.1.4, 9.6.7, 9.7, 10.3.2, 11.4.1, 14.2.4, 14.3.2
Contract Sum, Definition of
9.1
Contract Time
4.3.4, 4.3.7, 4.4.5, 5.2.3, 7.2.1.3, 7.3, 7.4, 8.1.1, 8.2, 8.3.1, 9.5.1, 9.7, 10.3.2, 12.1.1, 14.3.2
Contract Time, Definition of
8.1.1
CONTRACTOR
3
Contractor, Definition of
3.1, 6.1.2
Contractor's Construction Schedules
1.4.1.2, **3.10**, 3.12.1, 3.12.2, 4.3.7.2, 6.1.3
Contractor's Employees

AIA Document A201™ – 1997. Copyright © 1911, 1915, 1918, 1925, 1937, 1951, 1958, 1961, 1963, 1966, 1970, 1976, 1987 and 1997 by The American Institute of Architects. All rights reserved. WARNING: This AIA® Document is protected by U.S. Copyright Law and International Treaties. Unauthorized reproduction or distribution of this AIA® Document, or any portion of it, may result in severe civil and criminal penalties, and will be prosecuted to the maximum extent possible under the law. This document was produced by AIA software at 20:17:08 on 01/09/2006 under Order No.1000179669_1 which expires on 5/16/2006, and is not for resale.
User Notes: A201-21989 ver. 1 Seismic Retrofit (11/11/05)
(1304079764)

3.3.2, 3.4.3, 3.8.1, 3.9, 3.18.2, 4.2.3, 4.2.6, 10.2, 10.3, 11.1.1, 11.4.7, 14.1, 14.2.1.1,
Contractor's Liability Insurance
11.1
Contractor's Relationship with Separate Contractors and Owner's Forces
3.12.5, 3.14.2, 4.2.4, 6, 11.4.7, 12.1.2, 12.2.4
Contractor's Relationship with Subcontractors
1.2.2, 3.3.2, 3.18.1, 3.18.2, 5, 9.6.2, 9.6.7, 9.10.2, 11.4.1.2, 11.4.7, 11.4.8
Contractor's Relationship with the Architect
1.1.2, 1.6, 3.1.3, 3.2.1, 3.2.2, 3.2.3, 3.3.1, 3.4.2, 3.5.1, 3.7.3, 3.10, 3.11, 3.12, 3.16, 3.18, 4.1.2, 4.1.3, 4.2, 4.3.4, 4.4.1, 4.4.7, 5.2, 6.2.2, 7, 8.3.1, 9.2, 9.3, 9.4, 9.5, 9.7, 9.8, 9.9, 10.2.6, 10.3, 11.3, 11.4.7, 12, 13.4.2, 13.5
Contractor's Representations
1.5.2, 3.5.1, 3.12.6, 6.2.2, 8.2.1, 9.3.3, 9.8.2
Contractor's Responsibility for Those Performing the Work
3.3.2, 3.18, 4.2.3, 4.3.8, 5.3.1, 6.1.3, 6.2, 6.3, 9.5.1, 10
Contractor's Review of Contract Documents
1.5.2, 3.2, 3.7.3
Contractor's Right to Stop the Work
9.7
Contractor's Right to Terminate the Contract
4.3.10, 14.1
Contractor's Submittals
3.10, 3.11, 3.12, 4.2.7, 5.2.1, 5.2.3, 7.3.6, 9.2, 9.3, 9.8.2, 9.8.3, 9.9.1, 9.10.2, 9.10.3, 11.1.3, 11.5.2
Contractor's Superintendent
3.9, 10.2.6
Contractor's Supervision and Construction Procedures
1.2.2, 3.3, 3.4, 3.12.10, 4.2.2, 4.2.7, 4.3.3, 6.1.3, 6.2.4, 7.1.3, 7.3.4, 7.3.6, 8.2, 10, 12, 14
Contractual Liability Insurance
11.1.1.8, 11.2, 11.3
Coordination and Correlation
1.2, 1.5.2, 3.3.1, 3.10, 3.12.6, 6.1.3, 6.2.1
Copies Furnished of Drawings and Specifications
1.6, 2.2.5, 3.11
Copyrights
1.6, 3.17
Correction of Work
2.3, 2.4, 3.7.4, 4.2.1, 9.4.2, 9.8.2, 9.8.3, 9.9.1, 12.1.2, 12.2, 13.7.1.3
Correlation and Intent of the Contract Documents
1.2
Cost, Definition of
7.3.6
Costs
2.4, 3.2.3, 3.7.4, 3.8.2, 3.15.2, 4.3, 5.4.2, 6.1.1, 6.2.3, 7.3.3.3, 7.3.6, 7.3.7, 7.3.8, 9.10.2, 10.3.2, 10.5, 11.3, 11.4, 12.1, 12.2.1, 12.2.4, 13.5, 14
Cutting and Patching
6.2.5, **3.14**
Damage to Construction of Owner or Separate Contractors
3.14.2, 6.2.4, 9.2.1.5, 10.2.1.2, 10.2.5, 10.6, 11.1, 11.4, 12.2.4
Damage to the Work
3.14.2, 9.9.1, 10.2.1.2, 10.2.5, 10.6, 11.4, 12.2.4
Damages, Claims for
3.2.3, 3.18, 4.3.10, 6.1.1, 8.3.3, 9.5.1, 9.6.7, 10.3.3, 11.1.1, 11.4.5, 11.4.7, 14.1.3, 14.2.4
Damages for Delay
6.1.1, 8.3.3, 9.5.1.6, 9.7, 10.3.2
Date of Commencement of the Work, Definition of
8.1.2
Date of Substantial Completion, Definition of
8.1.3
Day, Definition of
8.1.4
Decisions of the Architect
4.2.6, 4.2.7, 4.2.11, 4.2.12, 4.2.13, 4.3.4, 4.4.1, 4.4.5, 4.4.6, 4.5, 6.3, 7.3.6, 7.3.8, 8.1.3, 8.3.1, 9.2, 9.4, 9.5.1, 9.8.4, 9.9.1, 13.5.2, 14.2.2, 14.2.4
Decisions to Withhold Certification
9.4.1, **9.5**, 9.7, 14.1.1.3
Defective or Nonconforming Work, Acceptance, Rejection and Correction of
2.3, 2.4, 3.5.1, 4.2.6, 6.2.5, 9.5.1, 9.5.2, 9.6.6, 9.8.2, 9.9.3, 9.10.4, 12.2.1, 13.7.1.3
Defective Work, Definition of
3.5.1
Definitions
1.1, 2.1.1, 3.1, 3.5.1, 3.12.1, 3.12.2, 3.12.3, 4.1.1, 4.3.1, 5.1, 6.1.2, 7.2.1, 7.3.1, 7.3.6, 8.1, 9.1, 9.8.1
Delays and Extensions of Time
3.2.3, 4.3.1, 4.3.4, 4.3.7, 4.4.5, 5.2.3, 7.2.1, 7.3.1, 7.4.1, **8.3**, 9.5.1, 9.7.1, 10.3.2, 10.6.1, 14.3.2
Disputes
4.1.4, 4.3, 4.4, 4.5, 4.6, 6.3, 7.3.8
Documents and Samples at the Site
3.11
Drawings, Definition of
1.1.5
Drawings and Specifications, Use and Ownership of
1.1.1, 1.3, 2.2.5, 3.11, 5.3
Effective Date of Insurance
8.2.2, 11.1.2
Emergencies
4.3.5, **10.6**, 14.1.1.2
Employees, Contractor's
3.3.2, 3.4.3, 3.8.1, 3.9, 3.18.2, 4.2.3, 4.2.6, 10.2, 10.3, 11.1.1, 11.4.7, 14.1, 14.2.1.1
Equipment, Labor, Materials and
1.1.3, 1.1.6, 3.4, 3.5.1, 3.8.2, 3.8.3, 3.12, 3.13, 3.15.1, 4.2.6, 4.2.7, 5.2.1, 6.2.1, 7.3.6, 9.3.2, 9.3.3, 9.5.1.3, 9.10.2, 10.2.1, 10.2.4, 14.2.1.2
Execution and Progress of the Work

AIA Document A201™ – 1997. Copyright © 1911, 1915, 1918, 1925, 1937, 1951, 1958, 1961, 1963, 1966, 1970, 1976, 1987 and 1997 by The American Institute of Architects. All rights reserved. WARNING: This AIA® Document is protected by U.S. Copyright Law and International Treaties. Unauthorized reproduction or distribution of this AIA® Document, or any portion of it, may result in severe civil and criminal penalties, and will be prosecuted to the maximum extent possible under the law. This document was produced by AIA software at 20:17:08 on 01/09/2006 under Order No.1000179669_1 which expires on 5/16/2006, and is not for resale.
User Notes: A201-21989 ver. 1 Seismic Retrofit (11/11/05)
(1304079764)

1.1.3, 1.2.1, 1.2.2, 2.2.3, 2.2.5, 3.1, 3.3, 3.4, 3.5, 3.7, 3.10, 3.12, 3.14, 4.2.2, 4.2.3, 4.3.3, 6.2.2, 7.1.3, 7.3.4, 8.2, 9.5, 9.9.1, 10.2, 10.3, 12.2, 14.2, 14.3
Extensions of Time
3.2.3, 4.3.1, 4.3.4, 4.3.7, 4.4.5, 5.2.3, 7.2.1, 7.3, 7.4.1, 9.5.1, 9.7.1, 10.3.2, 10.6.1, 14.3.2
Failure of Payment
4.3.6, 9.5.1.3, **9.7**, 9.10.2, 14.1.1.3, 14.2.1.2, 13.6
Faulty Work
(*See* Defective or Nonconforming Work)
Final Completion and Final Payment
4.2.1, 4.2.9, 4.3.2, 9.8.2, **9.10**, 11.1.2, 11.1.3, 11.4.1, 11.4.5, 12.3.1, 13.7, 14.2.4, 14.4.3
Financial Arrangements, Owner's
2.2.1, 13.2.2, 14.1.1.5
Fire and Extended Coverage Insurance
11.4
GENERAL PROVISIONS
1
Governing Law
13.1
Guarantees (*See* Warranty)
Hazardous Materials
10.2.4, **10.3**, 10.5
Identification of Contract Documents
1.5.1
Identification of Subcontractors and Suppliers
5.2.1
Indemnification
3.17, **3.18**, 9.10.2, 10.3.3, 10.5, 11.4.1.2, 11.4.7
Information and Services Required of the Owner
2.1.2, **2.2**, 3.2.1, 3.12.4, 3.12.10, 4.2.7, 4.3.3, 6.1.3, 6.1.4, 6.2.5, 9.3.2, 9.6.1, 9.6.4, 9.9.2, 9.10.3, 10.3.3, 11.2, 11.4, 13.5.1, 13.5.2, 14.1.1.4, 14.1.4
Injury or Damage to Person or Property
4.3.8, 10.2, 10.6
Inspections
3.1.3, 3.3.3, 3.7.1, 4.2.2, 4.2.6, 4.2.9, 9.4.2, 9.8.2, 9.8.3, 9.9.2, 9.10.1, 12.2.1, 13.5
Instructions to Bidders
1.1.1
Instructions to the Contractor
3.2.3, 3.3.1, 3.8.1, 4.2.8, 5.2.1, 7, 12, 8.2.2, 13.5.2
Insurance
3.18.1, 6.1.1, 7.3.6, 8.2.1, 9.3.2, 9.8.4, 9.9.1, 9.10.2, 9.10.5, 11
Insurance, Boiler and Machinery
11.4.2
Insurance, Contractor's Liability
11.1
Insurance, Effective Date of
8.2.2, 11.1.2
Insurance, Loss of Use
11.4.3
Insurance, Owner's Liability
11.2
Insurance, Project Management Protective Liability
11.3
Insurance, Property
10.2.5, **11.4**
Insurance, Stored Materials
9.3.2, 11.4.1.4
INSURANCE AND BONDS
11
Insurance Companies, Consent to Partial Occupancy
9.9.1, 11.4.1.5
Insurance Companies, Settlement with
11.4.10
Intent of the Contract Documents
1.2.1, 4.2.7, 4.2.12, 4.2.13, 7.4
Interest
13.6
Interpretation
1.2.3, **1.4**, 4.1.1, 4.3.1, 5.1, 6.1.2, 8.1.4
Interpretations, Written
4.2.11, 4.2.12, 4.3.6
Joinder and Consolidation of Claims Required
4.6.4
Judgment on Final Award
4.6.6
Labor and Materials, Equipment
1.1.3, 1.1.6, **3.4**, 3.5.1, 3.8.2, 3.8.3, 3.12, 3.13, 3.15.1, 42.6, 4.2.7, 5.2.1, 6.2.1, 7.3.6, 9.3.2, 9.3.3, 9.5.1.3, 9.10.2, 10.2.1, 10.2.4, 14.2.1.2
Labor Disputes
8.3.1
Laws and Regulations
1.6, 3.2.2, 3.6, 3.7, 3.12.10, 3.13, 4.1.1, 4.4.8, 4.6, 9.6.4, 9.9.1, 10.2.2, 11.1, 11.4, 13.1, 13.4, 13.5.1, 13.5.2, 13.6, 14
Liens
2.1.2, 4.4.8, 8.2.2, 9.3.3, 9.10
Limitation on Consolidation or Joinder
4.6.4
Limitations, Statutes of
4.6.3, 12.2.6, 13.7
Limitations of Liability
2.3, 3.2.1, 3.5.1, 3.7.3, 3.12.8, 3.12.10, 3.17, 3.18, 4.2.6, 4.2.7, 4.2.12, 6.2.2, 9.4.2, 9.6.4, 9.6.7, 9.10.4, 10.3.3, 10.2.5, 11.1.2, 11.2.1, 11.4.7, 12.2.5, 13.4.2
Limitations of Time
2.1.2, 2.2, 2.4, 3.2.1, 3.7.3, 3.10, 3.11, 3.12.5, 3.15.1, 4.2.7, 4.3, 4.4, 4.5, 4.6, 5.2, 5.3, 5.4, 6.2.4, 7.3, 7.4, 8.2, 9.2, 9.3.1, 9.3.3, 9.4.1, 9.5, 9.6, 9.7, 9.8, 9.9, 9.10, 11.1.3, 11.4.1.5, 11.4.6, 11.4.10, 12.2, 13.5, 13.7, 14
Loss of Use Insurance
11.4.3
Material Suppliers
1.6, 3.12.1, 4.2.4, 4.2.6, 5.2.1, 9.3, 9.4.2, 9.6, 9.10.5
Materials, Hazardous
10.2.4, 10.3, 10.5

AIA Document A201™ – 1997. Copyright © 1911, 1915, 1918, 1925, 1937, 1951, 1958, 1961, 1963, 1966, 1970, 1976, 1987 and 1997 by The American Institute of Architects. All rights reserved. WARNING: This AIA® Document is protected by U.S. Copyright Law and International Treaties. Unauthorized reproduction or distribution of this AIA® Document, or any portion of it, may result in severe civil and criminal penalties, and will be prosecuted to the maximum extent possible under the law. This document was produced by AIA software at 20:17:08 on 01/09/2006 under Order No.1000179669_1 which expires on 5/16/2006, and is not for resale.
User Notes: A201-21989 ver. 1 Seismic Retrofit (11/11/05)
(1304079764)

Materials, Labor, Equipment and
1.1.3, 1.1.6, 1.6.1, 3.4, 3.5.1, 3.8.2, 3.8.23, 3.12, 3.13, 3.15.1, 4.2.6, 4.2.7, 5.2.1, 6.2.1, 7.3.6, 9.3.2, 9.3.3, 9.5.1.3, 9.10.2, 10.2.1, 10.2.4, 14.2.1.2
Means, Methods, Techniques, Sequences and Procedures of Construction
3.3.1, 3.12.10, 4.2.2, 4.2.7, 9.4.2
Mechanic's Lien
4.4.8
Mediation
4.4.1, 4.4.5, 4.4.6, 4.4.8, 4.5, 4.6.1, 4.6.2, 8.3.1, 10.5
Minor Changes in the Work
1.1.1, 3.12.8, 4.2.8, 4.3.6, 7.1, 7.4
MISCELLANEOUS PROVISIONS
13
Modifications, Definition of
1.1.1
Modifications to the Contract
1.1.1, 1.1.2, 3.7.3, 3.11, 4.1.2, 4.2.1, 5.2.3, 7, 8.3.1, 9.7, 10.3.2, 11.4.1
Mutual Responsibility
6.2
Nonconforming Work, Acceptance of
9.6.6, 9.9.3, **12.3**
Nonconforming Work, Rejection and Correction of
2.3, 2.4, 3.5.1, 4.2.6, 6.2.5, 9.5.1, 9.8.2, 9.9.3, 9.10.4, 12.2.1, 13.7.1.3
Notice
2.2.1, 2.3, 2.4, 3.2.3, 3.3.1, 3.7.2, 3.7.4, 3.12.9, 4.3, 4.4.8, 4.6.5, 5.2.1, 8.2.2, 9.7, 9.10, 10.2.2, 11.1.3, 11.4.6, 12.2.2, 12.2.4, 13.3, 13.5.1, 13.5.2, 14.1, 14.2
Notice, Written
2.3, 2.4, 3.3.1, 3.9, 3.12.9, 3.12.10, 4.3, 4.4.8, 4.6.5, 5.2.1, 8.2.2, 9.7, 9.10, 10.2.2, 10.3, 11.1.3, 11.4.6, 12.2.2, 12.2.4, **13.3**, 14
Notice of Testing and Inspections
13.5.1, 13.5.2
Notice to Proceed
8.2.2
Notices, Permits, Fees and
2.2.2, **3.7**, 3.13, 7.3.6.4, 10.2.2
Observations, Contractor's
1.5.2, 3.2, 3.7.3, 4.3.4
Occupancy
2.2.2, 9.6.6, 9.8, 11.4.1.5
Orders, Written
1.1.1, 2.3, 3.9, 4.3.6, 7, 8.2.2, 11.4.9, 12.1, 12.2, 13.5.2, 14.3.1
OWNER
2
Owner, Definition of
2.1
Owner, Information and Services Required of the
2.1.2, **2.2**, 3.2.1, 3.12.4, 3.12.10, 4.2.7, 4.3.3, 6.1.3, 6.1.4, 6.2.5, 9.3.2, 9.6.1, 9.6.4, 9.9.2, 9.10.3, 10.3.3, 11.2, 11.4, 13.5.1, 13.5.2, 14.1.1.4, 14.1.4
Owner's Authority
1.6, 2.1.1, 2.3, 2.4, 3.4.2, 3.8.1, 3.12.10, 3.14.2, 4.1.2, 4.1.3, 4.2.4, 4.2.9, 4.3.6, 4.4.7, 5.2.1, 5.2.4, 5.4.1, 6.1, 6.3, 7.2.1, 7.3.1, 8.2.2, 8.3.1, 9.3.1, 9.3.2, 9.5.1, 9.9.1, 9.10.2, 10.3.2, 11.1.3, 11.3.1, 11.4.3, 11.4.10, 12.2.2, 12.3.1, 13.2.2, 14.3, 14.4
Owner's Financial Capability
2.2.1, 13.2.2, 14.1.1.5
Owner's Liability Insurance
11.2
Owner's Loss of Use Insurance
11.4.3
Owner's Relationship with Subcontractors
1.1.2, 5.2, 5.3, 5.4, 9.6.4, 9.10.2, 14.2.2
Owner's Right to Carry Out the Work
2.4, 12.2.4. 14.2.2.2
Owner's Right to Clean Up
6.3
Owner's Right to Perform Construction and to Award Separate Contracts
6.1
Owner's Right to Stop the Work
2.3
Owner's Right to Suspend the Work
14.3
Owner's Right to Terminate the Contract
14.2
Ownership and Use of Drawings, Specifications and Other Instruments of Service
1.1.1, **1.6**, 2.2.5, 3.2.1, 3.11.1, 3.17.1, 4.2.12, 5.3
Partial Occupancy or Use
9.6.6, **9.9**, 11.4.1.5
Patching, Cutting and
3.14, 6.2.5
Patents
3.17
Payment, Applications for
4.2.5, 7.3.8, 9.2, **9.3**, 9.4, 9.5.1, 9.6.3, 9.7.1, 9.8.5, 9.10.1, 9.10.3, 9.10.5, 11.1.3, 14.2.4, 14.4.3
Payment, Certificates for
4.2.5, 4.2.9, 9.3.3, **9.4**, 9.5, 9.6.1, 9.6.6, 9.7.1, 9.10.1, 9.10.3, 13.7, 14.1.1.3, 14.2.4
Payment, Failure of
4.3.6, 9.5.1.3, 9.7, 9.10.2, 14.1.1.3, 14.2.1.2, 13.6
Payment, Final
4.2.1, 4.2.9, 4.3.2, 9.8.2, 9.10, 11.1.2, 11.1.3, 11.4.1, 11.4.5, 12.3.1, 13.7, 14.2.4, 14.4.3
Payment Bond, Performance Bond and
7.3.6.4, 9.6.7, 9.10.3, 11.4.9, **11.5**
Payments, Progress
4.3.3, 9.3, 9.6, 9.8.5, 9.10.3, 13.6, 14.2.3
PAYMENTS AND COMPLETION
9
Payments to Subcontractors
5.4.2, 9.5.1.3, 9.6.2, 9.6.3, 9.6.4, 9.6.7, 11.4.8, 14.2.1.2
PCB
10.3.1

AIA Document A201™ – 1997. Copyright © 1911, 1915, 1918, 1925, 1937, 1951, 1958, 1961, 1963, 1966, 1970, 1976, 1987 and 1997 by The American Institute of Architects. All rights reserved. WARNING: This AIA® Document is protected by U.S. Copyright Law and International Treaties. Unauthorized reproduction or distribution of this AIA® Document, or any portion of it, may result in severe civil and criminal penalties, and will be prosecuted to the maximum extent possible under the law. This document was produced by AIA software at 20:17:08 on 01/09/2006 under Order No.1000179669_1 which expires on 5/16/2006, and is not for resale.
User Notes: A201-21989 ver. 1 Seismic Retrofit (11/11/05)

Performance Bond and Payment Bond
7.3.6.4, 9.6.7, 9.10.3, 11.4.9, **11.5**
Permits, Fees and Notices
2.2.2, **3.7**, 3.13, 7.3.6.4, 10.2.2
PERSONS AND PROPERTY, PROTECTION OF
10

Polychlorinated Biphenyl
10.3.1
Product Data, Definition of
3.12.2
Product Data and Samples, Shop Drawings
3.11, **3.12**, 4.2.7
Progress and Completion
4.2.2, 4.3.3, **8.2**, 9.8, 9.9.1, 14.1.4
Progress Payments
4.3.3, 9.3, **9.6**, 9.8.5, 9.10.3, 13.6, 14.2.3
Project, Definition of the
1.1.4
Project Management Protective Liability Insurance
11.3
Project Manual, Definition of the
1.1.7
Project Manuals
2.2.5
Project Representatives
4.2.10
Property Insurance
10.2.5, **11.4**
PROTECTION OF PERSONS AND PROPERTY
10
Regulations and Laws
1.6, 3.2.2, 3.6, 3.7, 3.12.10, 3.13, 4.1.1, 4.4.8, 4.6, 9.6.4, 9.9.1, 10.2.2, 11.1, 11.4, 13.1, 13.4, 13.5.1, 13.5.2, 13.6, 14
Rejection of Work
3.5.1, 4.2.6, 12.2.1
Releases and Waivers of Liens
9.10.2
Representations
1.5.2, 3.5.1, 3.12.6, 6.2.2, 8.2.1, 9.3.3, 9.4.2, 9.5.1, 9.8.2, 9.10.1
Representatives
2.1.1, 3.1.1, 3.9, 4.1.1, 4.2.1, 4.2.10, 5.1.1, 5.1.2, 13.2.1
Resolution of Claims and Disputes
4.4, 4.5, 4.6
Responsibility for Those Performing the Work
3.3.2, 3.18, 4.2.3, 4.3.8, 5.3.1, 6.1.3, 6.2, 6.3, 9.5.1, 10
Retainage
9.3.1, 9.6.2, 9.8.5, 9.9.1, 9.10.2, 9.10.3
Review of Contract Documents and Field Conditions by Contractor
1.5.2, **3.2**, 3.7.3, 3.12.7, 6.1.3
Review of Contractor's Submittals by Owner and Architect
3.10.1, 3.10.2, 3.11, 3.12, 4.2, 5.2, 6.1.3, 9.2, 9.8.2
Review of Shop Drawings, Product Data and Samples by Contractor
3.12
Rights and Remedies
1.1.2, 2.3, 2.4, 3.5.1, 3.15.2, 4.2.6, 4.3.4, 4.5, 4.6, 5.3, 5.4, 6.1, 6.3, 7.3.1, 8.3, 9.5.1, 9.7, 10.2.5, 10.3, 12.2.2, 12.2.4, **13.4**, 14
Royalties, Patents and Copyrights
3.17
Rules and Notices for Arbitration
4.6.2
Safety of Persons and Property
10.2, 10.6
Safety Precautions and Programs
3.3.1, 4.2.2, 4.2.7, 5.3.1, **10.1**, 10.2, 10.6
Samples, Definition of
3.12.3
Samples, Shop Drawings, Product Data and
3.11, **3.12**, 4.2.7
Samples at the Site, Documents and
3.11
Schedule of Values
9.2, 9.3.1
Schedules,
1.4.1.2, 3.10, 3.Construction12.1, 3.12.2, 4.3.7.2, 6.1.3
Separate Contracts and Contractors
1.1.4, 3.12.5, 3.14.2, 4.2.4, 4.2.7, 4.6.4, 6, 8.3.1, 11.4.7, 12.1.2, 12.2.5
Shop Drawings, Definition of
3.12.1
Shop Drawings, Product Data and Samples
3.11, **3.12**, 4.2.7
Site, Use of
3.13, 6.1.1, 6.2.1
Site Inspections
1.2.2, 3.2.1, 3.3.3, 3.7.1, 4.2, 4.3.4, 9.4.2, 9.10.1, 13.5
Site Visits, Architect's
4.2.2, 4.2.9, 4.3.4, 9.4.2, 9.5.1, 9.9.2, 9.10.1, 13.5
Special Inspections and Testing
4.2.6, 12.2.1, 13.5
Specifications, Definition of the
1.1.6
Specifications, The
1.1.1, **1.1.6**, 1.1.7, 1.2.2, 1.6, 3.11, 3.12.10, 3.17
Statute of Limitations
4.6.3, 12.2.6, 13.7
Stopping the Work
2.3, 4.3.6, 9.7, 10.3, 14.1
Stored Materials
6.2.1, 9.3.2, 10.2.1.2, 10.2.4, 11.4.1.4
Subcontractor, Definition of
5.1.1
SUBCONTRACTORS

AIA Document A201™ – 1997. Copyright © 1911, 1915, 1918, 1925, 1937, 1951, 1958, 1961, 1963, 1966, 1970, 1976, 1987 and 1997 by The American Institute of Architects. All rights reserved. WARNING: This AIA® Document is protected by U.S. Copyright Law and International Treaties. Unauthorized reproduction or distribution of this AIA® Document, or any portion of it, may result in severe civil and criminal penalties, and will be prosecuted to the maximum extent possible under the law. This document was produced by AIA software at 20:17:08 on 01/09/2006 under Order No.1000179669_1 which expires on 5/16/2006, and is not for resale.
User Notes: A201-21989 ver. 1 Seismic Retrofit (11/11/05)
(1304079764)

5
Subcontractors, Work by
1.2.2, 3.3.2, 3.12.1, 4.2.3, 5.2.3, 5.3, 5.4, 9.3.1.2, 9.6.7
Subcontractual Relations
5.3, 5.4, 9.3.1.2, 9.6, 9.10 10.2.1, 11.4.7, 11.4.8, 14.1, 14.2.1, 14.3.2
Submittals
1.6, 3.10, 3.11, 3.12, 4.2.7, 5.2.1, 5.2.3, 7.3.6, 9.2, 9.3, 9.8, 9.9.1, 9.10.2, 9.10.3, 11.1.3
Subrogation, Waivers of
6.1.1, 11.4.5, **11.4.7**
Substantial Completion
4.2.9, 8.1.1, 8.1.3, 8.2.3, 9.4.2, **9.8**, 9.9.1, 9.10.3, 9.10.4.2, 12.2, 13.7
Substantial Completion, Definition of
9.8.1
Substitution of Subcontractors
5.2.3, 5.2.4
Substitution of Architect
4.1.3
Substitutions of Materials
3.4.2, 3.5.1, 7.3.7
Sub-subcontractor, Definition of
5.1.2
Subsurface Conditions
4.3.4
Successors and Assigns
13.2
Superintendent
3.9, 10.2.6
Supervision and Construction Procedures
1.2.2, **3.3**, 3.4, 3.12.10, 4.2.2, 4.2.7, 4.3.3, 6.1.3, 6.2.4, 7.1.3, 7.3.6, 8.2, 8.3.1, 9.4.2, 10, 12, 14
Surety
4.4.7, 5.4.1.2, 9.8.5, 9.10.2, 9.10.3, 14.2.2
Surety, Consent of
9.10.2, 9.10.3
Surveys
2.2.3
Suspension by the Owner for Convenience
14.4
Suspension of the Work
5.4.2, 14.3
Suspension or Termination of the Contract
4.3.6, 5.4.1.1, 11.4.9, 14
Taxes
3.6, 3.8.2.1, 7.3.6.4
Termination by the Contractor
4.3.10, **14.1**
Termination by the Owner for Cause
4.3.10, 5.4.1.1, **14.2**
Termination of the Architect
4.1.3
Termination of the Contractor
14.2.2
TERMINATION OR SUSPENSION OF THE CONTRACT
14
Tests and Inspections
3.1.3, 3.3.3, 4.2.2, 4.2.6, 4.2.9, 9.4.2, 9.8.3, 9.9.2, 9.10.1, 10.3.2, 11.4.1.1, 12.2.1, **13.5**
TIME
8
Time, Delays and Extensions of
3.2.3, 4.3.1, 4.3.4, 4.3.7, 4.4.5, 5.2.3, 7.2.1, 7.3.1, 7.4.1, **8.3**, 9.5.1, 9.7.1, 10.3.2, 10.6.1, 14.3.2
Time Limits
2.1.2, 2.2, 2.4, 3.2.1, 3.7.3, 3.10, 3.11, 3.12.5, 3.15.1, 4.2, 4.3, 4.4, 4.5, 4.6, 5.2, 5.3, 5.4, 6.2.4, 7.3, 7.4, 8.2, 9.2, 9.3.1, 9.3.3, 9.4.1, 9.5, 9.6, 9.7, 9.8, 9.9, 9.10, 11.1.3, 11.4.1.5, 11.4.6, 11.4.10, 12.2, 13.5, 13.7, 14
Time Limits on Claims
4.3.2, 4.3.4, 4.3.8, 4.4, 4.5, 4.6
Title to Work
9.3.2, 9.3.3
UNCOVERING AND CORRECTION OF WORK
12
Uncovering of Work
12.1
Unforeseen Conditions
4.3.4, 8.3.1, 10.3
Unit Prices
4.3.9, 7.3.3.2
Use of Documents
1.1.1, 1.6, 2.2.5, 3.12.6, 5.3
Use of Site
3.13, 6.1.1, 6.2.1
Values, Schedule of
9.2, 9.3.1
Waiver of Claims by the Architect
13.4.2
Waiver of Claims by the Contractor
4.3.10, 9.10.5, 11.4.7, 13.4.2
Waiver of Claims by the Owner
4.3.10, 9.9.3, 9.10.3, 9.10.4, 11.4.3, 11.4.5, 11.4.7, 12.2.2.1, 13.4.2, 14.2.4
Waiver of Consequential Damages
4.3.10, 14.2.4
Waiver of Liens
9.10.2, 9.10.4
Waivers of Subrogation
6.1.1, 11.4.5, **11.4.7**
Warranty
3.5, 4.2.9, 4.3.5.3, 9.3.3, 9.8.4, 9.9.1, 9.10.4, 12.2.2, 13.7.1.3
Weather Delays
4.3.7.2
Work, Definition of
1.1.3
Written Consent

AIA Document A201™ – 1997. Copyright © 1911, 1915, 1918, 1925, 1937, 1951, 1958, 1961, 1963, 1966, 1970, 1976, 1987 and 1997 by The American Institute of Architects. All rights reserved. WARNING: This AIA® Document is protected by U.S. Copyright Law and International Treaties. Unauthorized reproduction or distribution of this AIA® Document, or any portion of it, may result in severe civil and criminal penalties, and will be prosecuted to the maximum extent possible under the law. This document was produced by AIA software at 20:17:08 on 01/09/2006 under Order No.1000179669_1 which expires on 5/16/2006, and is not for resale.
User Notes: A201-21989 ver. 1 Seismic Retrofit (11/11/05)
(1304079764)

1.6, 3.4.2, 3.12.8, 3.14.2, 4.1.2, 4.3.4, 4.6.4, 9.3.2, 9.8.5, 9.9.1, 9.10.2, 9.10.3, 11.4.1, 13.2, 13.4.2
Written Interpretations
4.2.11, 4.2.12, 4.3.6
Written Notice
2.3, 2.4, 3.3.1, 3.9, 3.12.9, 3.12.10, 4.3, 4.4.8, 4.6.5, 5.2.1, 8.2.2, 9.7, 9.10, 10.2.2, 10.3, 11.1.3, 11.4.6, 12.2.2, 12.2.4, 13.3, 14
Written Orders
1.1.1, 2.3, 3.9, 4.3.6, 7, 8.2.2, 11.4.9, 12.1, 12.2, 13.5.2, 14.3.1

AIA Document A201™ – 1997. Copyright © 1911, 1915, 1918, 1925, 1937, 1951, 1958, 1961, 1963, 1966, 1970, 1976, 1987 and 1997 by The American Institute of Architects. All rights reserved. WARNING: This AIA® Document is protected by U.S. Copyright Law and International Treaties. Unauthorized reproduction or distribution of this AIA® Document, or any portion of it, may result in severe civil and criminal penalties, and will be prosecuted to the maximum extent possible under the law. This document was produced by AIA software at 20:17:08 on 01/09/2006 under Order No.1000179669_1 which expires on 5/16/2006, and is not for resale.
User Notes: A201-21989 ver. 1 Seismic Retrofit (11/11/05)
(1304079764)

ARTICLE 1 GENERAL PROVISIONS

§ 1.1 BASIC DEFINITIONS

§ 1.1.1 THE CONTRACT DOCUMENTS

The Contract Documents consist of the Agreement between Owner and Contractor (hereinafter the Agreement), Conditions of the Contract (General, Supplementary and other Conditions), Drawings, Specifications, Addenda issued prior to execution of the Contract, other documents listed in the Agreement and Modifications issued after execution of the Contract. A Modification is (1) a written amendment to the Contract signed by both parties, (2) a Change Order, (3) a Construction Change Directive or (4) a written order for a minor change in the Work issued by the Owner. Unless specifically enumerated in the Agreement, the Contract Documents do not include other documents such as bidding requirements (advertisement or invitation to bid, Instructions to Bidders, sample forms, the Contractor's bid or portions of Addenda relating to bidding requirements).

§ 1.1.2 THE CONTRACT

The Contract Documents form the Contract for Construction. The Contract represents the entire and integrated agreement between the parties hereto and supersedes prior negotiations, representations or agreements, either written or oral. The Contract may be amended or modified only by a Modification. Except as set forth in Paragraphs 5.3 and 5.4, below, the Contract Documents shall not be construed to create a contractual relationship of any kind (1) between the Architect and Contractor, (2) between the Owner and a Subcontractor or Sub-subcontractor, (3) between the Owner and Architect or (4) between any persons or entities other than the Owner and Contractor.

§ 1.1.3 THE WORK

The term "Work" means the construction and services required by the Contract Documents, whether completed or partially completed, and includes all other labor, materials, equipment and services provided or to be provided by the Contractor to fulfill the Contractor's obligations. The Work may constitute the whole or a part of the Project.

§ 1.1.4 THE PROJECT

The Project is the total construction of which the Work performed under the Contract Documents may be the whole or a part and which may include construction by the Owner or by separate contractors.

§ 1.1.5 THE DRAWINGS

The Drawings are the graphic and pictorial portions of the Contract Documents showing the design, location and dimensions of the Work, generally including plans, elevations, sections, details, schedules and diagrams.

§ 1.1.6 THE SPECIFICATIONS

The Specifications are that portion of the Contract Documents consisting of the written requirements for materials, equipment, systems, standards and workmanship for the Work, and performance of related services.

§ 1.1.7 THE PROJECT MANUAL

The Project Manual is a volume assembled for the Work which may include the bidding requirements, sample forms, Conditions of the Contract and Specifications.

§ 1.2 CORRELATION AND INTENT OF THE CONTRACT DOCUMENTS

§ 1.2.1 The intent of the Contract Documents is to include all items necessary for the proper execution and completion of the Work by the Contractor. The Contract Documents are complementary, and what is required by one shall be as binding as if required by all; performance by the Contractor shall be required only to the extent consistent with the Contract Documents and reasonably inferable from them as being necessary to produce the indicated results.

§ 1.2.2 Organization of the Specifications into divisions, sections and articles, and arrangement of Drawings shall not control the Contractor in dividing the Work among Subcontractors or in establishing the extent of Work to be performed by any trade. Contractor represents that the Subcontractors, manufacturers and suppliers engaged or to be engaged by Contractor are and will be familiar with the requirements of the Contract Documents for performance by them of their obligations.

§ 1.2.3 Unless otherwise stated in the Contract Documents, words which have well-known technical or construction industry meanings are used in the Contract Documents in accordance with such recognized meanings.

AIA Document A201™ – 1997. Copyright © 1911, 1915, 1918, 1925, 1937, 1951, 1958, 1961, 1963, 1966, 1970, 1976, 1987 and 1997 by The American Institute of Architects. All rights reserved. WARNING: This AIA® Document is protected by U.S. Copyright Law and International Treaties. Unauthorized reproduction or distribution of this AIA® Document, or any portion of it, may result in severe civil and criminal penalties, and will be prosecuted to the maximum extent possible under the law. This document was produced by AIA software at 20:17:08 on 01/09/2006 under Order No.1000179669_1 which expires on 5/16/2006, and is not for resale.
User Notes: A201-21989 ver. 1 Seismic Retrofit (11/11/05)
(1304079764)

§ 1.3 CAPITALIZATION

§ 1.3.1 Terms capitalized in these General Conditions include those which are (1) specifically defined, (2) the titles of numbered articles or (3) the titles of other documents published by the American Institute of Architects.

§ 1.4 INTERPRETATION

§ 1.4.1 In the interest of brevity the Contract Documents frequently omit modifying words such as "all" and "any" and articles such as "the" and "an," but the fact that a modifier or an article is absent from one statement and appears in another is not intended to affect the interpretation of either statement.

§ 1.5 EXECUTION OF CONTRACT DOCUMENTS

§ 1.5.1 The Contract Documents shall be signed by the Owner and Contractor. If either the Owner or Contractor or both do not sign all the Contract Documents, the Architect shall identify such unsigned Documents upon request.

§ 1.5.2 Execution of the Contract by the Contractor is a representation that the Contractor has visited the site, become generally familiar with local conditions under which the Work is to be performed and correlated personal observations with requirements of the Contract Documents. Contractor and each Subcontractor shall evaluate and satisfy themselves as to the conditions and limitations under which the Work is to be performed, including without limitation, (1) the location, condition, layout, nature of the Project site and surrounding areas, (2) generally prevailing climactic conditions, (3) anticipated labor supply and cost, (4) availability and costs of materials, tools and equipment and (5) other similar issues. Owner assumes no responsibility or liability for the safety of the Project site or any improvements located at the Project site. The Owner shall not be required to make any adjustment in either the Contract Sum or the Contract Time in connection with any failure by the Contractor or any Subcontractor to comply with the requirements of this Subparagraph 1.5.2. The Contract Sum includes provisions for all Work that may be performed by Contractor to overcome patent site and soil conditions and, except as expressly provided in Subparagraph 4.3.4, below, claims for additional compensation or extension of time because of the Contractor's failure to familiarize himself with such conditions will not be allowed.

§ 1.6 OWNERSHIP AND USE OF DRAWINGS, SPECIFICATIONS AND OTHER INSTRUMENTS OF SERVICE

§ 1.6.1 All Drawings, Specifications, and other documents prepared by the Architect are and shall remain the property of Owner, and Owner shall retain all common law, statutory and other reserved rights with respect thereto. They shall not be used by Contractor on any other project without the prior written consent of Owner, and Contractor shall take such action as may be necessary to prevent their use on any other project or for additions to the Project outside the scope of the Work by any Subcontractor, Sub-subcontractor, or material or equipment supplier. Contractor, Subcontractors, Subsubcontractors, and material and equipment suppliers are granted a limited license to use and reproduce applicable portions of the Drawings, Specifications, and other documents prepared by Architect appropriate to and for use in the execution of their Work under the Contract Documents. All copies made under this license shall bear the statutory copyright notice, if any, shown on the originals. Submittals or distributions necessary to meet official regulatory requirements or for other purposes relating to completion of the Project are not to be construed as a publication in derogation of the Owner's copyright or other reserved rights.

ARTICLE 2 OWNER

§ 2.1 GENERAL

§ 2.1.1 The Owner is the person or entity identified as such in the Agreement and is referred to throughout the Contract Documents as if singular in number. The Owner shall designate in writing a representative who shall have express authority to bind the Owner with respect to all matters requiring the Owner's approval or authorization. The Architect does not have such authority. The term "Owner" means the Owner or the Owner's authorized representative.

§ 2.1.2 The Owner shall furnish to the Contractor within fifteen days after receipt of a written request, information necessary and relevant for the Contractor to evaluate, give notice of or enforce mechanic's lien rights. Such information shall include a correct statement of the record legal title to the property on which the Project is located, usually referred to as the site, and the Owner's interest therein.

§ 2.2 INFORMATION AND SERVICES REQUIRED OF THE OWNER

§ 2.2.1 [Intentionally Deleted.]

§ 2.2.2 Except for permits and fees, including those required under Section 3.7.1, which are the responsibility of the Contractor under the Contract Documents, the Owner shall secure and pay for necessary approvals, easements,

AIA Document A201™ – 1997. Copyright © 1911, 1915, 1918, 1925, 1937, 1951, 1958, 1961, 1963, 1966, 1970, 1976, 1987 and 1997 by The American Institute of Architects. All rights reserved. WARNING: This AIA® Document is protected by U.S. Copyright Law and International Treaties. Unauthorized reproduction or distribution of this AIA® Document, or any portion of it, may result in severe civil and criminal penalties, and will be prosecuted to the maximum extent possible under the law. This document was produced by AIA software at 20:17:08 on 01/09/2006 under Order No.1000179669_1 which expires on 5/16/2006, and is not for resale.
User Notes: A201-21989 ver. 1 Seismic Retrofit (11/11/05)

assessments and charges required for construction, use or occupancy of permanent structures or for permanent changes in existing facilities.

§ 2.2.3 The Owner shall furnish surveys describing physical characteristics, legal limitations and utility locations for the site of the Project, and a legal description of the site. The Contractor shall be entitled to rely on the accuracy of information furnished by the Owner but shall exercise proper precautions relating to the safe performance of the Work. Owner does not assume any responsibility whatsoever with respect to the sufficiency or accuracy of surveys or reports of borings made, or of the logs of test borings, or other investigations, or of the interpretations made thereof, and there is no warranty or guaranty, expressed or implied, that the conditions indicated by such investigations, borings, logs or information are representative of those existing throughout the Project site, or any part thereof, or the concealed conditions may be different from those described or may not have been identified.

§ 2.2.4 Information or services required of the Owner by the Contract Documents shall be furnished by the Owner with reasonable promptness. Any other information or services relevant to the Contractor's performance of the Work under the Owner's control shall be furnished by the Owner after receipt from the Contractor of a written request for such information or services.

§ 2.2.5 Unless otherwise provided in the Contract Documents, the Contractor will be furnished, free of charge, such copies of Drawings as are reasonably necessary for execution of the Work.

§ 2.3 OWNER'S RIGHT TO STOP THE WORK

§ 2.3.1 If the Contractor fails to correct Work which is not in accordance with the requirements of the Contract Documents as required by Section 12.2 or fails to carry out Work in accordance with the Contract Documents, the Owner may issue a written order to the Contractor to stop the Work, or any portion thereof, until the cause for such order has been eliminated; however, the right of the Owner to stop the Work shall not give rise to a duty on the part of the Owner to exercise this right for the benefit of the Contractor or any other person or entity, except to the extent required by Section 6.1.3. Owner's exercise of the right described in this Subparagraph 2.3.1. shall not give rise to any extension of the Contract Time nor shall the Contract Sum include any sums, costs, or charges directly attributable to Owner's exercise of this right.

§ 2.4 OWNER'S RIGHT TO CARRY OUT THE WORK

§ 2.4.1 If the Contractor defaults or neglects to carry out the Work in accordance with the Contract Documents and fails within a seven-day period after receipt of written notice from the Owner to commence and continue correction of such default or neglect with diligence and promptness, the Owner may, without prejudice to other remedies the Owner may have, correct such deficiencies. In such case an appropriate Change Order shall be issued deducting from payments then or thereafter due the Contractor the reasonable cost of correcting such deficiencies, including Owner's expenses and compensation for the Architect's additional services made necessary by such default, neglect or failure. If payments then or thereafter due the Contractor are not sufficient to cover such amounts, the Contractor shall pay the difference to the Owner.

2.5 At all times prior to the completion of the Work, Owner, Architect, Owner's lender(s) ("Lender(s)"), and all of their employees and agents, shall have the right to have full access and use of the Work site. Owner's right hereunder shall include, without limitation, making inspections of the Work, including inspections carried out by Owner's agents (such as without limitation, Architect, engineers or other professional inspectors), stationing a Project director, a job supervisor and other personnel employed by Owner at the Work site, showing the Work to prospective concessionaires, tenants, lenders and other interested persons, and carrying out the work of fixturing the improvements comprising the Work for Owner's purposes in using the completed Work. Such use shall not constitute acceptance of the Work or any part thereof, or waive any of Owner's rights under the Contract Documents.

2.6 Owner will not be responsible for and will not have control or charge over construction means, methods, techniques, sequences or procedures, or for safety precautions and programs in connection with the Work, and Owner will not be responsible for Contractor's failure to carry out the Work in accordance with the Contract Documents and applicable laws, rules and regulations. Owner will not be responsible for or have control or charge over the acts or omissions of Contractor, Subcontractors, or any of their agents or employees, or any other person performing any of the Work.

AIA Document A201™ – 1997. Copyright © 1911, 1915, 1918, 1925, 1937, 1951, 1958, 1961, 1963, 1966, 1970, 1976, 1987 and 1997 by The American Institute of Architects. All rights reserved. WARNING: This AIA® Document is protected by U.S. Copyright Law and International Treaties. Unauthorized reproduction or distribution of this AIA® Document, or any portion of it, may result in severe civil and criminal penalties, and will be prosecuted to the maximum extent possible under the law. This document was produced by AIA software at 20:17:08 on 01/09/2006 under Order No.1000179669_1 which expires on 5/16/2006, and is not for resale.
User Notes: A201-21989 ver. 1 Seismic Retrofit (11/11/05)

2.7 Owner has the authority to reject the Work which does not conform to the Contract Documents. Whenever, in its opinion, Owner considers it necessary or advisable for implementation of the intent of the Contract Documents, Owner will have the authority to require special inspection or testing of the Work in accordance with Subparagraph 13.5.2 whether or not such Work is then fabricated, installed or completed. However, neither Owner's authority to act under this Paragraph 2.7, nor any decision made by Owner in good faith, either to exercise or not to exercise such authority, shall give rise to any duty or responsibility of Owner to Contractor, any Subcontractor, any of their agents or employees, or any other person performing any of the Work.

2.8 In the event Owner determines that the progress of Work affecting the critical path of the Schedule is behind the progress anticipated in the Schedule, and Contractor is not entitled to receive an extension of the Contract Time in accordance with Contract Documents, Contractor shall submit to Owner for its approval a "Recovery Plan" which will indicate the manner in which Contractor intends to get the Work back on schedule in accordance with the Schedule. The cost of preparing and implementing the Recovery Plan shall be borne solely by Contractor, and shall not be the subject of a Change Order or the use of any contingency funds. In addition, Owner may require Contractor to take such actions as Owner deems necessary to expedite progress of the Work in conformance with the progress anticipated by the Schedule, which actions may include, without limitation, increasing the number of workmen performing the Work, utilizing overtime work and requiring additional work shifts. Such action by Owner to place Contractor back on schedule shall not be included in the Cost of the Work, nor shall Contractor receive any additional compensation for these activities unless Contractor would be entitled to receive an extension of Contract Time and Contractor has made such a request, all in accordance with Subparagraph 8.3.1, below.

ARTICLE 3 CONTRACTOR

§ 3.1 GENERAL

§ 3.1.1 The Contractor is the person or entity identified as such in the Agreement and is referred to throughout the Contract Documents as if singular in number. The term "Contractor" means the Contractor or the Contractor's authorized representative.

§ 3.1.2 The Contractor shall perform the Work in accordance with the Contract Documents.

§ 3.1.3 The Contractor shall not be relieved of obligations to perform the Work in accordance with the Contract Documents either by activities or duties of the Architect in the Architect's administration of the Contract, or by tests, inspections or approvals required or performed by persons other than the Contractor.

§ 3.2 REVIEW OF CONTRACT DOCUMENTS AND FIELD CONDITIONS BY CONTRACTOR

§ 3.2.1 Since the Contract Documents are complementary, before starting each portion of the Work, the Contractor shall carefully study and compare the various Drawings and other Contract Documents relative to that portion of the Work, as well as the information furnished by the Owner pursuant to Section 2.2.3, shall take field measurements of any existing conditions related to that portion of the Work and shall observe any conditions at the site affecting it. Contractor shall at once report to Architect and Owner errors, inconsistencies or omissions discovered. If Contractor fails to so report such discovered errors, inconsistencies or omissions, or those that it should have discovered in the exercise of reasonable care, it shall be responsible for the cost of correction or, at Owner's option, the reduction in value of any defective portion of the Work thereafter performed. Contractor further acknowledges that it has visited the site, examined all conditions affecting the Work, is fully familiar with all of the conditions thereon and affecting the same, and having carefully examined all Drawings, Specifications, and documents, represents that there are no known discrepancies or omissions in the Contract Documents and that the Drawings and Specifications are adequate and sufficient for the completion of Work in accordance with applicable laws and regulations, except as may be reported in writing to Architect and Owner within five (5) business days after receipt by Contractor of any Drawings or Specifications or which are not discoverable except during the course of construction, in which latter case Contractor shall report same to Owner within five (5) business days after discovery thereof by Contractor or its Subcontractors, agents or employees.

§ 3.2.2 Any design errors or omissions noted by the Contractor during this review shall be reported promptly to the Owner and Architect, but it is recognized that the Contractor's review is made in the Contractor's capacity as a contractor and not as a licensed design professional unless otherwise specifically provided in the Contract Documents. The Contractor is not required to ascertain that the Contract Documents are in accordance with applicable laws, statutes, ordinances, building codes, and rules and regulations, but any nonconformity discovered by or made known to the Contractor shall be reported promptly to the Owner and Architect.

AIA Document A201™ – 1997. Copyright © 1911, 1915, 1918, 1925, 1937, 1951, 1958, 1961, 1963, 1966, 1970, 1976, 1987 and 1997 by The American Institute of Architects. All rights reserved. WARNING: This AIA® Document is protected by U.S. Copyright Law and International Treaties. Unauthorized reproduction or distribution of this AIA® Document, or any portion of it, may result in severe civil and criminal penalties, and will be prosecuted to the maximum extent possible under the law. This document was produced by AIA software at 20:17:08 on 01/09/2006 under Order No.1000179669_1 which expires on 5/16/2006, and is not for resale.
User Notes: A201-21989 ver. 1 Seismic Retrofit (11/11/05) (1304079764)

§ 3.2.3 If the Contractor believes that additional cost or time is involved because of clarifications or instructions issued by the Architect in response to the Contractor's notices or requests for information pursuant to Sections 3.2.1 and 3.2.2, the Contractor shall make Claims as provided in Sections 4.3.6 and 4.3.7. If the Contractor fails to perform the obligations of Sections 3.2.1 and 3.2.2, the Contractor shall pay such costs and damages to the Owner as would have been avoided if the Contractor had performed such obligations. The Contractor shall not be liable to the Owner or Architect for damages resulting from errors, inconsistencies or omissions in the Contract Documents or for differences between field measurements or conditions and the Contract Documents unless the Contractor recognized such error, inconsistency, omission or difference and knowingly failed to report it to the Owner and Architect.

§ 3.2.4 Any ambiguities or discrepancies discovered by Contractor shall be promptly submitted to Owner and Architect for a recommendation before products are ordered or construction initiated for that portion of the Work. Contractor shall perform the Work reflecting the correction of such errors, inconsistencies, and omissions subject to Owner's execution of appropriate Change Orders.

§ 3.2.4.1 Work ordered, fabricated or constructed by Contractor, when the Contract Documents do not clearly specify in detail the Work to be done or where the Work conflicts with the Contract Documents without such Change Orders, shall be corrected by Contractor at its own expense.

§ 3.2.4.2 Recommendations of Architect with regard to such ambiguities or discrepancies shall not make Architect an arbitrator to establish responsibilities of Subcontractors to Contractor with regard to such portions of the Work.

§ 3.2.5 Contractor shall notify Architect and Owner in writing, of materials, systems, procedures or methods of construction either shown on the Drawings or specified in the Specifications which Contractor believes are incorrect or inappropriate for the purposes intended, or for which Contractor objects to furnishing the warranties required by the Contract Documents. Architect and Owner will make a determination of such matters in writing, Contractor shall be responsible for any additional costs resulting from its failure to notify Architect and Owner that such materials, systems, procedures and methods, are incorrect or inappropriate.

§ 3.2.6 Dimensions indicated on the Drawings are required dimensions, regardless of measurement per given scale. Contractor shall verify at site necessary levels, measurements, etc., for complete fabrication, assembly and installation, fitting of equipment, fixtures and the Work. Where dimensions are not indicated and exact location is not apparent, Contractor shall promptly notify Architect and Owner's Representative, and Architect shall compute the required measurements. Inadvertent discrepancies, or contradictions, or omissions of details, figures or notes of one drawing which are correctly given on another drawing shall not be cause for additional charges or claims by Contractor.

§ 3.3 SUPERVISION AND CONSTRUCTION PROCEDURES

§ 3.3.1 The Contractor shall supervise and direct the Work, using the Contractor's best skill and attention. The Contractor shall be solely responsible for and have control over construction means, methods, techniques, sequences and procedures and for coordinating all portions of the Work under the Contract, unless the Contract Documents give other specific instructions concerning these matters. If the Contract Documents give specific instructions concerning construction means, methods, techniques, sequences or procedures, the Contractor shall evaluate the jobsite safety thereof and, except as stated below, shall be fully and solely responsible for the jobsite safety of such means, methods, techniques, sequences or procedures. If the Contractor determines that such means, methods, techniques, sequences or procedures may not be safe, the Contractor shall give prompt and timely written notice to the Owner and Architect and shall not proceed with that portion of the Work without further written instructions from the Architect and confirmed by Owner. If the Contractor is then instructed to proceed with the required means, methods, techniques, sequences or procedures without acceptance of changes proposed by the Contractor, the Owner shall be solely responsible for any resulting loss or damage.

§ 3.3.2 The Contractor shall be responsible to the Owner for acts and omissions of the Contractor's employees, Subcontractors (of all tiers) and their agents and employees, and other persons or entities performing portions of the Work for or on behalf of the Contractor or any of its Subcontractors.

AIA Document A201™ – 1997. Copyright © 1911, 1915, 1918, 1925, 1937, 1951, 1958, 1961, 1963, 1966, 1970, 1976, 1987 and 1997 by The American Institute of Architects. All rights reserved. WARNING: This AIA® Document is protected by U.S. Copyright Law and International Treaties. Unauthorized reproduction or distribution of this AIA® Document, or any portion of it, may result in severe civil and criminal penalties, and will be prosecuted to the maximum extent possible under the law. This document was produced by AIA software at 20:17:08 on 01/09/2006 under Order No.1000179669_1 which expires on 5/16/2006, and is not for resale.
User Notes: A201-21989 ver. 1 Seismic Retrofit (11/11/05)
(1304079764)

§ 3.3.3 The Contractor shall be responsible for inspection of portions of Work already performed to determine that such portions are in proper condition to receive subsequent Work.

§ 3.3.4 In addition to Paragraph 10.2, below, Contractor shall institute and supervise reasonable precautions to prevent damage, injury or loss to (i) all employees involved with the Work and other persons who may be affected thereby, including, without limitation, invitees, licensees, trespassers and persons on adjacent properties, (ii) all the Work and all materials and equipment to be incorporated therein, including those in storage on or off site under the care, custody or control of Contractor or any Subcontractor, (iii) Owner's personal and real property and other property at the Work site or adjacent thereto, including without limitation, fixtures, carpets, and other related items, and (iv) all of Owner's employees, agents and representatives. Contractor shall at all times take such precautions as may be necessary to shore, brace, secure and protect the Work and shall protect such parts of the Work and shall provide and maintain such security, including, without limitation, rules, guards, fences, lights and signs, as may be necessary or required to comply with this Subparagraph 3.3.4. Contractor shall further post necessary danger signs and other warnings against hazards, promulgate and enforce safety codes, rules and regulations and notify owners, lessees and users of adjacent property. Contractor shall particularly ensure and be responsible for compliance with all applicable state and federal safety laws, ordinances, rules, regulations and lawful orders of all governmental authorities and other persons or entities having jurisdiction. In any emergency threatening the Work or adjoining property, Contractor may act pursuant to Paragraph 10.6. Contractor shall not be responsible for the costs of such emergency work, unless the emergency was due to Contractor's own fault or neglect.

§ 3.3.5 Contractor shall not cause or permit any disruption to the streets and utilities serving any occupied portion of the Project, the remainder of the Project, or other properties without Owner's prior consent, which may be conditioned upon restrictions in the time, place and manner of such disruption.

§ 3.4 LABOR AND MATERIALS

§ 3.4.1 Unless otherwise provided in the Contract Documents, the Contractor shall provide and pay for labor, materials, equipment, tools, construction equipment and machinery, transportation, and other facilities and services necessary for proper execution and completion of the Work, whether temporary or permanent and whether or not incorporated or to be incorporated in the Work.

§ 3.4.2 The Contractor may make substitutions only with the prior written consent of the Owner, after evaluation by the Architect and in accordance with a Change Order.

§ 3.4.3 The Contractor shall enforce strict discipline and good order among the Contractor's employees and other persons carrying out the Contract. The Contractor shall not permit employment of unfit persons or persons not skilled in tasks assigned to them.

§ 3.4.4 Where the Contract Documents refer to particular construction means, methods, techniques, sequences or procedures or indicate or imply that such are to be used on the Work, such mention is intended only to indicate that the operations of Contractor shall be such as to produce the quality of work implied by the operations described, but that the actual determination of whether the described operations may be safely or suitably employed on the Work shall be the responsibility of Contractor, who shall notify Architect in writing of the actual means, methods, techniques, sequences or procedures which will be employed on the Work, if these differ from those mentioned in the Contract Documents. All loss, damage, or liability, or cost of correcting defective work arising from the employment of any construction means, methods, techniques, sequences or procedures shall be borne by the Contractor, notwithstanding that such construction means, methods, techniques, sequences or procedures are referred to, indicated or implied by the Contract Documents.

§ 3.4.5 Any material specified by reference to the number, symbol, or title of a specific standard such as that of the American Society for Testing materials (ASTM), a Product or Commercial Standard, Federal Specification or other similar standards, shall comply with the requirements of the dated revisions stated in the Specifications, or where the Specifications contain no revision date, shall comply with the requirements of the latest revision thereof and any supplement or amendment thereto, in effect on the date of receipt of bids. The standards referred to, except as specifically modified in the Specifications, shall have the same force as if they were printed in full context within the Specifications.

§ 3.4.6 Contractor shall coordinate all Work of like material in order to produce harmony of matching finishes,

AIA Document A201™ – 1997. Copyright © 1911, 1915, 1918, 1925, 1937, 1951, 1958, 1961, 1963, 1966, 1970, 1976, 1987 and 1997 by The American Institute of Architects. All rights reserved. WARNING: This AIA® Document is protected by U.S. Copyright Law and International Treaties. Unauthorized reproduction or distribution of this AIA® Document, or any portion of it, may result in severe civil and criminal penalties, and will be prosecuted to the maximum extent possible under the law. This document was produced by AIA software at 20:17:08 on 01/09/2006 under Order No.1000179669_1 which expires on 5/16/2006, and is not for resale.
User Notes: A201-21989 ver. 1 Seismic Retrofit (11/11/05) (1304079764)

textures, colors, etc., throughout the various components of the Project.

§ 3.4.7 Where it is required in the Specifications that materials, products, processes, equipment or the like be installed or applied in accord with manufacturer's instructions, directions, or specifications or words to this effect, it shall be construed to mean that said application or installation shall be in strict accord with current printed instructions furnished by the manufacturer of the material concerned for use under conditions similar to those at the job site. Unless otherwise stated, Contractor shall furnish one (1) copy of instructions to Owner and one (1) copy to Architect.

§ 3.4.8 If, after execution of the Contract and prior to submittal of applicable Shop Drawings, Contractor desires to submit an alternative product or method in lieu of what has been specified or shown in the Contract Documents, Contractor may do so in writing and setting forth the following:

§ 3.4.8.1 Full explanation of the proposed substitution and submittal of all supporting data including technical information, catalog cuts, warranties, test results, installation instructions, operating procedures, and other like information necessary for a complete evaluation of the substitution.

§ 3.4.8.2 Reasons the substitution is advantageous and necessary, including the benefits to Owner and the Work in the event the substitution is acceptable.

§ 3.4.8.3 The adjustment, if any, in the Guaranteed Maximum Price, in the event the substitution is acceptable.

§ 3.4.8.4 The adjustment, if any, in the Contract Time and the Schedule in the event the substitution is acceptable.

§ 3.4.8.5 An affidavit stating that (1) the proposed substitution conforms and meets all the requirements of the pertinent Specifications and the requirements shown on the Drawings and (2) Contractor accepts the warranty and correction obligations in connection with the proposed substitution as if originally specified by Architect. Proposals for substitutions shall be submitted in triplicate to Architect in sufficient time to allow Architect no less than fourteen (14) days for review. No substitutions will be considered or allowed without Contractor's submittal of complete substantiating data and information as stated hereinabove.

§ 3.4.9 Substitutions and alternates may be rejected without explanation and will be considered only under one or more of the following conditions:

§ 3.4.9.1 Required for compliance with interpretation of code requirements or insurance regulations then existing.

§ 3.4.9.2 Unavailability of specified products, through no fault of Contractor.

§ 3.4.9.3 Subsequent information discloses liability of specified products to perform properly or to fit in designated space.

§ 3.4.9.4 Manufacturer/fabricator refuses to certify or guarantee performance or specified product as required.

§ 3.4.9.5 When in the judgment of Owner or Architect, that a substitution would be substantially to Owner's best interests, in terms of costs, time, or other considerations.

§ 3.4.10 Whether any proposed substitution is accepted by Owner or Architect, Contractor shall reimburse Owner for any fees charged by Architect or other consultants for evaluating such proposed substitute.

§ 3.5 WARRANTY

§ 3.5.1 The Contractor warrants to the Owner and Architect that materials and equipment furnished under the Contract will be of good quality and new unless otherwise required or permitted by the Contract Documents, that the Work will be free from defects not inherent in the quality required or permitted, and that the Work will conform to

AIA Document A201™ – 1997. Copyright © 1911, 1915, 1918, 1925, 1937, 1951, 1958, 1961, 1963, 1966, 1970, 1976, 1987 and 1997 by The American Institute of Architects. All rights reserved. WARNING: This AIA® Document is protected by U.S. Copyright Law and International Treaties. Unauthorized reproduction or distribution of this AIA® Document, or any portion of it, may result in severe civil and criminal penalties, and will be prosecuted to the maximum extent possible under the law. This document was produced by AIA software at 20:17:08 on 01/09/2006 under Order No.1000179669_1 which expires on 5/16/2006, and is not for resale.
User Notes: A201-21989 ver. 1 Seismic Retrofit (11/11/05)
(1304079764)

the requirements of the Contract Documents. Work not conforming to these requirements, including substitutions not properly approved and authorized, shall be defective. The Contractor's warranty excludes remedy for damage or defect caused by abuse, modifications not executed by the Contractor, improper or insufficient maintenance, improper operation, or normal wear and tear and normal usage. If required by the Owner or Architect, the Contractor shall furnish satisfactory evidence as to the kind and quality of materials and equipment. Contractor agrees to assign to Owner at the time of final completion of the Work, any and all manufacturer's warranties relating to material and labor used in the Work and further agrees to perform the Work in such a manner so as to preserve any and all such manufacturer's warranties. Contractor shall furnish seventy-two (72) hour callback service for the equipment provided by Contractor for a period of one (1) year after final payment and acceptance of the Work. Provided, however, Contractor shall provide prompt emergency call back service for all pumping systems, emergency generator, electric switch gear, smoke exhaust fans, chillers and a domestic water heaters.

§ 3.6 TAXES

§ 3.6.1 The Contractor shall pay sales, consumer, use and similar taxes for the Work provided by the Contractor which are legally enacted when bids, if any, are due or otherwise as of the date of the Agreement, whether or not yet effective or merely scheduled to go into effect.

§ 3.7 PERMITS, FEES AND NOTICES

§ 3.7.1 Unless otherwise provided in the Contract Documents, the Contractor shall secure and pay for the building permit and other permits and governmental fees, licenses and inspections necessary for proper execution and completion of the Work.

§ 3.7.2 The Contractor shall comply with and give notices required by laws, ordinances, rules, regulations, lawful orders and all other requirements of public authorities applicable to performance of the Work. If Contractor fails to give such notice, Contractor shall be liable for and shall indemnify and hold harmless Owner and Architect, and their respective employees, officers, and agents, against any resulting fines, penalties, liabilities, judgments or damages, including reasonable attorneys' fees, imposed on or incurred by the parties indemnified hereunder.

§ 3.7.3 Except as otherwise provided in the Contract Documents, it is not the Contractor's responsibility to ascertain that the Contract Documents are in accordance with applicable laws, statutes, ordinances, building codes, and rules and regulations. However, if the Contractor observes that portions of the Contract Documents are at variance therewith, the Contractor shall promptly notify the Architect and Owner in writing, and necessary changes shall be accomplished by appropriate Modification.

§ 3.7.4 If the Contractor performs Work knowing it to be contrary to laws, statutes, ordinances, building codes, and rules and regulations without such notice to the Architect and Owner, or if Contractor, knowingly or unknowingly, performs Work which is contrary to the laws, statutes, ordinances, building codes, and rules and regulations due to the means, methods or techniques employed by Contractor, Contractor shall assume full responsibility for such Work and shall, in addition to Owner's other remedies, pay all costs of correction, and reimburse Owner of any diminution in value of the Project and expenses incurred by Owner as a result of Contractor's actions. Contractor shall send all notices, make all necessary arrangements, and provide all labor and materials required to protect and maintain in operation of all public utilities within the Project site or affected by the Work.

§ 3.8 ALLOWANCES

§ 3.8.1 The Contractor shall include in the Contract Sum all allowances stated in the Contract Documents. Items covered by allowances shall be supplied for such amounts and by such persons or entities as the Owner may direct, but the Contractor shall not be required to employ persons or entities to whom the Contractor has reasonable objection.

§ 3.8.2 Unless otherwise provided in the Contract Documents:

.1 allowances shall cover the cost to the Contractor of materials and equipment delivered at the site and all required taxes, less applicable trade discounts;

.2 Contractor's and its Subcontractors' (of every tier), and suppliers' costs for unloading and handling at the site, labor, installation costs, overhead, profit and other expenses contemplated for stated allowance amounts shall be included in the Contract Sum but not in the allowances;

.3 whenever costs are more than or less than allowances, the Contract Sum shall be adjusted accordingly by Change Order. The amount of the Change Order shall reflect (1) the difference between actual

AIA Document A201™ – 1997. Copyright © 1911, 1915, 1918, 1925, 1937, 1951, 1958, 1961, 1963, 1966, 1970, 1976, 1987 and 1997 by The American Institute of Architects. All rights reserved. WARNING: This AIA® Document is protected by U.S. Copyright Law and International Treaties. Unauthorized reproduction or distribution of this AIA® Document, or any portion of it, may result in severe civil and criminal penalties, and will be prosecuted to the maximum extent possible under the law. This document was produced by AIA software at 20:17:08 on 01/09/2006 under Order No.1000179669_1 which expires on 5/16/2006, and is not for resale.
User Notes: A201-21989 ver. 1 Seismic Retrofit (11/11/05)
(1304079764)

costs and the allowances under Section 3.8.2.1 and (2) changes in Contractor's costs under Section 3.8.2.2.

§ 3.8.3 Materials and equipment under an allowance shall be selected by the Owner in sufficient time to avoid delay in the Work.

§ 3.9 SUPERINTENDENT

§ 3.9.1 The Contractor shall employ a competent superintendent approved in writing by Owner and necessary assistants who shall be in attendance at the Project site during performance of the Work. The superintendent shall represent the Contractor, and communications given to the superintendent shall be as binding as if given to the Contractor. Important communications shall be confirmed in writing. Other communications shall be similarly confirmed on written request in each case. The persons designated by Contractor as the Project Manager and Project Superintendent shall be subject to Owner's prior written approval, and such persons shall not be reassigned by Contractor without Owner's prior written consent.

§ 3.10 CONTRACTOR'S CONSTRUCTION SCHEDULES

§ 3.10.1 The Schedule shall not exceed time limits current under the Contract Documents, shall be revised at appropriate intervals as required by the conditions of the Work and Project, shall be related to the entire Project to the extent required by the Contract Documents, and shall provide for expeditious and practicable execution of the Work. Such revisions are subject to Owner's prior written approval.

§ 3.10.2 The Contractor shall prepare and keep current, for the Architect's approval, a schedule of submittals which is coordinated with the Schedule and allows the Architect reasonable time to review submittals.

§ 3.10.3 The Contractor shall perform the Work in accordance with the Schedule and provide monthly updating thereof.

§ 3.10.4 Contractor shall submit, track and maintain a detailed request for information (RFI) log, change order log and submittal log on forms acceptable to Owner.

§ 3.11 DOCUMENTS AND SAMPLES AT THE SITE

§ 3.11.1 The Contractor shall maintain at the site for the Owner one record copy of the Drawings, Specifications, Addenda, Change Orders and other Modifications, in good order and marked currently to record field changes and selections made during construction, and one record copy of approved Shop Drawings, Product Data, Samples and similar required submittals. These shall be available to the Owner and Architect and shall be delivered to the Owner upon completion of the Work.

§ 3.12 SHOP DRAWINGS, PRODUCT DATA AND SAMPLES

§ 3.12.1 Shop Drawings are drawings, diagrams, schedules and other data specially prepared for the Work by the Contractor or a Subcontractor, Sub-subcontractor, manufacturer, supplier or distributor to illustrate some portion of the Work.

§ 3.12.2 Product Data are illustrations, standard schedules, performance charts, instructions, brochures, diagrams and other information furnished by the Contractor to illustrate materials or equipment for some portion of the Work.

§ 3.12.3 Samples are physical examples which illustrate materials, equipment or workmanship and establish standards by which the Work will be judged.

§ 3.12.4 Shop Drawings, Product Data, Samples and similar submittals are not Contract Documents. The purpose of their submittal is to demonstrate for those portions of the Work for which submittals are required by the Contract Documents the way by which the Contractor proposes to conform to the information given and the design concept expressed in the Contract Documents. Review by the Architect is subject to the limitations of Section 4.2.7. Informational submittals upon which the Architect is not expected to take responsive action may be so identified in the Contract Documents. Submittals which are not required by the Contract Documents may be returned by the Architect without action.

§ 3.12.5 The Contractor shall review for compliance with the Contract Documents, approve and submit to the Architect Shop Drawings, Product Data, Samples and similar submittals required by the Contract Documents with

AIA Document A201™ – 1997. Copyright © 1911, 1915, 1918, 1925, 1937, 1951, 1958, 1961, 1963, 1966, 1970, 1976, 1987 and 1997 by The American Institute of Architects. All rights reserved. WARNING: This AIA® Document is protected by U.S. Copyright Law and International Treaties. Unauthorized reproduction or distribution of this AIA® Document, or any portion of it, may result in severe civil and criminal penalties, and will be prosecuted to the maximum extent possible under the law. This document was produced by AIA software at 20:17:08 on 01/09/2006 under Order No.1000179669_1 which expires on 5/16/2006, and is not for resale.
User Notes: A201-21989 ver. 1 Seismic Retrofit (11/11/05)

reasonable promptness and in such sequence as to cause no delay in the Work or in the activities of the Owner or of separate contractors. Submittals which are not marked as reviewed for compliance with the Contract Documents and approved by the Contractor may be returned by the Architect without action.

§ 3.12.6 By approving and submitting Shop Drawings, Product Data, Samples and similar submittals, the Contractor represents that the Contractor has determined and verified materials, field measurements and field construction criteria related thereto, or will do so, and has checked and coordinated the information contained within such submittals with the requirements of the Work and of the Contract Documents.

§ 3.12.7 The Contractor shall perform no portion of the Work for which the Contract Documents require submittal and review of Shop Drawings, Product Data, Samples or similar submittals until the respective submittal has been approved by the Architect.

§ 3.12.8 The Work shall be in accordance with approved submittals except that the Contractor shall not be relieved of responsibility for deviations from requirements of the Contract Documents by the Architect's approval of Shop Drawings, Product Data, Samples or similar submittals unless the Contractor has specifically informed the Architect in writing of such deviation at the time of submittal and (1) the Architect has given written approval to the specific deviation as a minor change in the Work, or (2) a Change Order or Construction Change Directive has been issued authorizing the deviation. The Contractor shall not be relieved of responsibility for errors or omissions in Shop Drawings, Product Data, Samples or similar submittals by the Architect's approval thereof.

§ 3.12.9 The Contractor shall direct specific attention, in writing or on resubmitted Shop Drawings, Product Data, Samples or similar submittals, to revisions other than those requested by the Architect on previous submittals. In the absence of such written notice the Architect's approval of a resubmission shall not apply to such revisions.

§ 3.12.10 The Contractor shall not be required to provide professional services which constitute the practice of architecture or engineering unless such services are specifically required by the Contract Documents for a portion of the Work or unless the Contractor needs to provide such services in order to carry out the Contractor's responsibilities for construction means, methods, techniques, sequences and procedures. The Contractor shall not be required to provide professional services in violation of applicable law. If professional design services or certifications by a design professional related to systems, materials or equipment are specifically required of the Contractor by the Contract Documents, the Owner and the Architect will specify all performance and design criteria that such services must satisfy. The Contractor shall cause such services or certifications to be provided by a properly licensed design professional, whose signature and seal shall appear on all drawings, calculations, specifications, certifications, Shop Drawings and other submittals prepared by such professional. Shop Drawings and other submittals related to the Work designed or certified by such professional, if prepared by others, shall bear such professional's written approval when submitted to the Architect. The Owner and the Architect shall be entitled to rely upon the adequacy, accuracy and completeness of the services, certifications or approvals performed by such design professionals, provided the Owner and Architect have specified to the Contractor all performance and design criteria that such services must satisfy. Pursuant to this Section 3.12.10, the Architect will review, approve or take other appropriate action on submittals only for the limited purpose of checking for conformance with information given and the design concept expressed in the Contract Documents. The Contractor shall not be responsible for the adequacy of the performance or design criteria required by the Contract Documents.

§ 3.13 USE OF SITE

§ 3.13.1 The Contractor shall confine operations at the site to areas permitted by law, ordinances, permits and the Contract Documents and shall not unreasonably encumber the site with materials or equipment.

§ 3.14 CUTTING AND PATCHING

§ 3.14.1 The Contractor shall be responsible for cutting, fitting or patching required to complete the Work or to make its parts fit together properly.

§ 3.14.2 The Contractor shall not damage or endanger a portion of the Work or fully or partially completed construction of the Owner or separate contractors by cutting, patching or otherwise altering such construction, or by excavation. The Contractor shall not cut or otherwise alter such construction by the Owner or a separate contractor except with written consent of the Owner and of such separate contractor; such consent shall not be unreasonably

AIA Document A201™ – 1997. Copyright © 1911, 1915, 1918, 1925, 1937, 1951, 1958, 1961, 1963, 1966, 1970, 1976, 1987 and 1997 by The American Institute of Architects. All rights reserved. WARNING: This AIA® Document is protected by U.S. Copyright Law and International Treaties. Unauthorized reproduction or distribution of this AIA® Document, or any portion of it, may result in severe civil and criminal penalties, and will be prosecuted to the maximum extent possible under the law. This document was produced by AIA software at 20:17:08 on 01/09/2006 under Order No.1000179669_1 which expires on 5/16/2006, and is not for resale.
User Notes: A201-21989 ver. 1 Seismic Retrofit (11/11/05)
(1304079764)

withheld. The Contractor shall not unreasonably withhold from the Owner or a separate contractor the Contractor's consent to cutting or otherwise altering the Work.

§ 3.15 CLEANING UP

§ 3.15.1 The Contractor shall keep the premises and surrounding area free from accumulation of waste materials or rubbish caused by operations under the Contract, on a daily basis. At completion of the Work, the Contractor shall remove from and about the Project waste materials, rubbish, the Contractor's tools, construction equipment, machinery and surplus materials.

§ 3.15.2 If the Contractor fails to clean up as provided in the Contract Documents, the Owner may do so and the cost thereof shall be charged to the Contractor.

§3.15.3 Contractor shall be responsible for broken glass, and at or before completion of the Work, as directed by Owner, shall replace such damaged or broken glass. After broken glass has been replaced, Contractor shall remove all labels, wash, and polish both sides of all glass. Further, in addition to general broom cleaning, Contractor shall perform the final cleaning for all trades immediately upon completion of the Work, which shall include, but not limited to, the following: (a) remove temporary protections; (b) remove marks, stains, fingerprints and other soil or dirt from painted, decorated, and natural-finished woodwork and other Work; (c) remove spots, mortar, plaster, soil and paint from ceramic tile, marble, and other finish materials and wash or wipe clean; (d) clean fixtures, cabinet work and equipment, removing stains, paint, dirt, and dust and leave in undamaged, new condition; (e) clean aluminum in accordance with recommendations of the manufacturer; and (f) clean resilient floors thoroughly with a wellrinsed mop containing only enough moisture to clean off any surface dirt or dust and buff dry by machine to bring the surfaces to sheen.

§3.15.4 Costs incurred by Owner under this Paragraph 3.15 shall be deducted from amounts otherwise due to Contractor, or at Owner's option, reimbursed by Contractor to Owner immediately following Owner's demand.

§ 3.16 ACCESS TO WORK

§ 3.16.1 The Contractor shall provide the Owner and Architect access to the Work in preparation and progress wherever located.

§ 3.17 ROYALTIES, PATENTS AND COPYRIGHTS

§ 3.17.1 The Contractor shall pay all royalties and license fees. The Contractor shall defend suits or claims for infringement of copyrights and patent rights and shall hold the Owner and Architect harmless from loss on account thereof, but shall not be responsible for such defense or loss when a particular design, process or product of a particular manufacturer or manufacturers is required by the Contract Documents or where the copyright violations are contained in Drawings, Specifications or other documents prepared by the Owner or Architect. However, if the Contractor has reason to believe that the required design, process or product is an infringement of a copyright or a patent, the Contractor shall be responsible for such loss unless such information is promptly furnished in writing to the Architect and Owner.

§ 3.18 INDEMNIFICATION

§ 3.18.1 All work covered by the Contract Documents done at the Project site, or in preparing or delivering materials or equipment, or providing services for the Project, or any or all of them, to or for the Project, shall be at the sole risk of Contractor. To the fullest extent permitted by law, and not as Cost of the Work, Contractor shall defend all claims through legal counsel acceptable to Owner, and indemnify and hold Owner, Owner's Board of Governors, Architect, Lender and their agents, employees and representatives (collectively referred to as "Indemnitees") harmless from and against each and all of the following: (1) Any claim, demand, liability, loss, damage, cost, expense, including attorneys' fees, awards, fines, or judgments (collectively "Liabilities") arising out of, or relating in any way, directly or indirectly, to the Work, to death or bodily or personal injury to persons, injury or damage to tangible property, including the loss of use therefrom, construction defects, or other loss, damage or expense; (2) Any and all Liabilities sustained by the Indemnitees, including attorneys' fees, on account of or through the use or misuse of the land which is the Project location, the improvements thereon, or any part of either by Contractor, or by any other person whomsoever thereon, at the invitation, express or implied, of Contractor, or by permission of Contractor arising out of or indirectly or directly due to or resulting from the performance of this Contract by Contractor; and (3) Any Liabilities, including attorneys' fees, by reason of the use or misuse by Contractor, its agents, servants, employees , invitees, licensees or permittees of the Project or any part thereof, or the improvements

AIA Document A201™ – 1997. Copyright © 1911, 1915, 1918, 1925, 1937, 1951, 1958, 1961, 1963, 1966, 1970, 1976, 1987 and 1997 by The American Institute of Architects. All rights reserved. WARNING: This AIA® Document is protected by U.S. Copyright Law and International Treaties. Unauthorized reproduction or distribution of this AIA® Document, or any portion of it, may result in severe civil and criminal penalties, and will be prosecuted to the maximum extent possible under the law. This document was produced by AIA software at 20:17:08 on 01/09/2006 under Order No.1000179669_1 which expires on 5/16/2006, and is not for resale.
User Notes: A201-21989 ver. 1 Seismic Retrofit (11/11/05)

(1304079764)

situated thereon. This indemnity shall survive the expiration or termination of this Contract and shall remain in effect until such time as an action on account of any matter covered by such indemnity is barred by applicable statute of limitations. Contractor's indemnification obligation under Paragraph 3.18 applies regardless of the passive or active negligence of Indemnitees and regardless of whether liability without fault is imposed or sought to be imposed on Indemnitees, except to the extent that such indemnity is void or otherwise unenforceable under applicable law in effect on or validly retroactive to the date of the Agreement, and except where such Liabilities are the result of the sole negligence or willful misconduct of Indemnitees or independent contractors who are directly responsible to Indemnitees other than Contractor. Further, this indemnity shall not be construed to negate, abridge or otherwise reduce any other right or obligation of indemnity which would otherwise exist in favor of the Indemnitees under the Contract Documents, at law or in equity, as to any part or person described in this Paragraph 3.18 or otherwise. Such indemnification shall extend to Liabilities which accrue or relate to events which occur after completion of the Work as well as during the Work's progress. Nothing herein shall be deemed to abridge the rights, if any, of Owner to seek contribution where appropriate.

§ 3.18.2 In any and all claims against any person or entity indemnified under this Section 3.18 by any employee of the Contractor, any Subcontractor, anyone directly or indirectly employed by any of them or anyone for whose acts any of them may be liable, the indemnification obligation under Section 3.18 shall not be limited in any way by any limitation on the amount or type of damages, compensation or benefits payable by or for the Contractor or any Subcontractor under workers' compensation acts, disability benefit acts or other employee benefit acts, or the insurance required under Article 11. Said indemnity is intended to apply during the period of this Contract or Contractor's performance and shall survive the expiration or termination of this Contract until such time as action on the account of any matter covered by such indemnity is barred by the applicable statute of limitations.

§ 3.18.3 Contractor, as a material part of the consideration of this Contract, waives on its behalf, except to the extent occasioned by the willful misconduct or sole negligent acts of the Indemnitees, their agents or employees, all claims and demands against the Indemnitees for all loss, damage, injury, sickness or death of any person, and all other claims of any kind or character to any person or property directly or indirectly arising out of or resulting from Contractor's presence at the site or the performance of this Contract or the commencement, prosecution and completion of the Work.

§ 3.18.4 The obligations of Contractor under this Paragraph 3.18 shall not extend to the liability of Architect, its agents or employees, arising out of (1) the preparation or approval of maps, drawings, opinions, reports, surveys, Change Orders, designs or specifications, or (2) the giving of or the failure to give directions or instructions by Architect, its agents or employees.

§ 3.18.5 All fees, costs and expenses to be paid by Contractor as indemnitor hereunder shall be made on a "paid as incurred" basis within thirty (30) days of the indemnitor's receipt of a statement or invoice therefor. Should the indemnitor object to any such fees, costs or expenses, the indemnitor shall nevertheless pay such fees, costs and expenses within such thirty (30) days which payment, if expressly stated in writing at the time of such payment to be "under protest", shall not prejudice the indemnitor's right to subsequently object to such fee, cost or expense paid under protest.

§ 3.18.6 In the event both Owner and Contractor are named as defendants in the same civil action, and Owner determines that a conflict of interest exists between the parties, Contractor will provide, at its own cost, independent counsel for Owner. Owner may, at its option, designate its Office of General Counsel as equal participating counsel in any litigation wherein Owner is defended by Contractor.

§ 3.18.7 Contractor shall include in all agreements with Subcontractors clauses substantially similar to Subparagraph 3.18.1 where the Subcontractor agrees to indemnify Contractor and Indemnitees and agrees to be liable to Indemnitees for loss of or damage to their property.

§ 3.18.8 Contractor's duty to defend Indemnitees is entirely separate from, independent of and free-standing of Contractor's duty to indemnity Indemnitees, including without limitation, the defense of Indemnitees against claims for which Indemnitees (or any of them) may be strictly liable and applies whether the issue of Contractor's negligence, breach of contract or other fault or obligation has been determined and whether Indemnitees (or any of them) have paid any sums, or incurred any detriment, arising out of or resulting directly or indirectly from Contractor's performance of the Work. It is the parties' intention that Indemnitees (or any of them) shall be entitled

AIA Document A201™ – 1997. Copyright © 1911, 1915, 1918, 1925, 1937, 1951, 1958, 1961, 1963, 1966, 1970, 1976, 1987 and 1997 by The American Institute of Architects. All rights reserved. WARNING: This AIA® Document is protected by U.S. Copyright Law and International Treaties. Unauthorized reproduction or distribution of this AIA® Document, or any portion of it, may result in severe civil and criminal penalties, and will be prosecuted to the maximum extent possible under the law. This document was produced by AIA software at 20:17:08 on 01/09/2006 under Order No.1000179669_1 which expires on 5/16/2006, and is not for resale.
User Notes: A201-21989 ver. 1 Seismic Retrofit (11/11/05)

to obtain summary adjudication of Contractor's duty to defend Indemnitees at any stage of any action or suit within the scope of this Paragraph 3.18. Indemnitees shall be entitled to recover their attorneys' fees and costs incurred in enforcing the provisions of this Paragraph 3.18. Payment to Contractor by any Indemnitee shall not be a condition precedent to enforcing such parties' right to indemnity. The contractual right of indemnification provided to Indemnitees hereunder shall be cumulative to all rights of equitable indemnity to which the Indemnitees may otherwise be entitled; provided, however, that reservation of the right of equitable indemnity shall not apply to reduce or decrease any rights of indemnity provided to Indemnitees pursuant to the Contract.

§ 3.19 Contractor shall attend weekly job meetings at the site, along with its job superintendent and project manager, if required by Owner. In addition, within ten (10) days of Owner's request, Contractor shall execute and deliver to Owner and its lender(s) having an interest in the Project, a certificate addressed to Owner and such lender(s) concerning the compliance of the Work with the Contract Documents and applicable laws and regulations, the status of completion of the Work, the status of payments and defaults, and such other matters as such lender(s) may request.

§ 3.20 Contractor represents and warrants the following to Owner (in addition to the other representations and warranties contained in the Contract Documents), which representations and warranties shall survive any termination of the Owner-Contractor Agreement and the final completion of the Work:

§ 3.20.1 that it is financially solvent, able to pay its debts as they mature and possessed of sufficient working capital to complete the Work and perform its obligations under Contract Documents;

§ 3.20.2 that it is able to furnish the plant, tools, materials, supplies, equipment, and labor required to complete the Work and perform its obligations under the Contract Documents and has sufficient experience and competence to do so; and

§ 3.20.3 that it is authorized to do business in the State where the Project is located and properly licensed by all necessary governmental authorities having jurisdiction over it and over the Work and the site of the Project.

ARTICLE 4 ADMINISTRATION OF THE CONTRACT

§ 4.1 ARCHITECT

§ 4.1.1 [Intentionally Deleted.]

§ 4.1.2 [Intentionally Deleted.]

§ 4.1.3 [Intentionally Deleted.]

§ 4.2 ARCHITECT'S ADMINISTRATION OF THE CONTRACT

§ 4.2.1 [Intentionally Deleted.]

§ 4.2.2 [Intentionally Deleted.]

§ 4.2.3 [Intentionally Deleted.]

§ 4.2.4 [Intentionally Deleted.]

§ 4.2.5 [Intentionally Deleted.]

§ 4.2.6 [Intentionally Deleted.]

§ 4.2.7 [Intentionally Deleted.]

§ 4.2.8 [Intentionally Deleted.]

§ 4.2.9 [Intentionally Deleted.]

§ 4.2.10 [Intentionally Deleted.]

AIA Document A201™ – 1997. Copyright © 1911, 1915, 1918, 1925, 1937, 1951, 1958, 1961, 1963, 1966, 1970, 1976, 1987 and 1997 by The American Institute of Architects. All rights reserved. WARNING: This AIA® Document is protected by U.S. Copyright Law and International Treaties. Unauthorized reproduction or distribution of this AIA® Document, or any portion of it, may result in severe civil and criminal penalties, and will be prosecuted to the maximum extent possible under the law. This document was produced by AIA software at 20:17:08 on 01/09/2006 under Order No.1000179669_1 which expires on 5/16/2006, and is not for resale.
User Notes: A201-21989 ver. 1 Seismic Retrofit (11/11/05)
(1304079764)

§ 4.2.11 [Intentionally Deleted.]

§ 4.2.12 [Intentionally Deleted.]

§ 4.2.13 [Intentionally Deleted.]

§ 4.3 CLAIMS AND DISPUTES

§ 4.3.1 Definition. A Claim is a demand or assertion by one of the parties seeking, as a matter of right, adjustment or interpretation of Contract terms, payment of money, extension of time or other relief with respect to the terms of the Contract. The term "Claim" also includes other disputes and matters in question between the Owner and Contractor arising out of or relating to the Contract. Claims must be initiated by written notice. The responsibility to substantiate Claims shall rest with the party making the Claim.

§ 4.3.2 Time Limits on Claims. Claims by either party must be initiated within 21 days after occurrence of the event giving rise to such Claim or within 21 days after the claimant first recognizes the condition giving rise to the Claim, whichever is later. Claims must be initiated by written notice to the Owner and the other party.

§ 4.3.3 Continuing Contract Performance. Pending final resolution of a Claim except as otherwise agreed in writing or as provided in Section 9.7.1 and Article 14, the Contractor shall proceed diligently with performance of the Contract and the Owner shall continue to make payments for undisputed amounts in accordance with the Contract Documents.

§ 4.3.4 Claims for Concealed or Unknown Conditions. If conditions are encountered at the site which are (1) subsurface or otherwise concealed physical conditions which differ materially from those indicated in the Contract Documents or (2) unknown physical conditions of an unusual nature, which differ materially from those ordinarily found to exist and generally recognized as inherent in construction activities of the character provided for in the Contract Documents, then notice by the observing party shall be given to the other party promptly before conditions are disturbed and in no event later than 21 days after first observance of the conditions. The Owner will promptly investigate such conditions and, if they differ materially and cause an increase or decrease in the Contractor's cost of, or time required for, performance of any part of the Work, will recommend an equitable adjustment in the Contract Sum or Contract Time, or both. If the Owner determines that the conditions at the site are not materially different from those indicated in the Contract Documents and that no change in the terms of the Contract is justified, the Owner shall so notify the Contractor in writing, stating the reasons. Claims by Contractor in opposition to such determination must be made within 21 days after Owner has given notice of the decision.

§ 4.3.5 Claims for Additional Cost. If the Contractor wishes to make Claim for an increase in the Contract Sum, written notice to Owner as provided herein shall be given before proceeding to execute the Work. Prior notice is not required for Claims relating to an emergency endangering life or property arising under Section 10.6.

§ 4.3.6 If the Contractor believes additional cost is involved for reasons including but not limited to (1) a written interpretation from the Architect, (2) an order by the Owner to stop the Work where the Contractor was not at fault, (3) a written order for a minor change in the Work, (4) failure of payment by the Owner, (5) termination of the Contract by the Owner, (6) Owner's suspension or (7) other reasonable grounds, Claim shall be filed in accordance with this Section 4.3.

§ 4.3.7 Claims for Additional Time

§ 4.3.7.1 If the Contractor wishes to make Claim for an increase in the Contract Time, written notice as provided herein shall be given. The Contractor's Claim shall include an estimate of cost and of probable effect of delay on progress of the Work. In the case of a continuing delay only one Claim is necessary.

§ 4.3.7.2 If adverse weather conditions are the basis for a Claim for additional time, such Claim shall be documented by data substantiating that weather conditions were abnormal for the period of time, could not have been reasonably anticipated and had an adverse effect on the scheduled construction.

§ 4.3.8 Injury or Damage to Person or Property. If either party to the Contract suffers injury or damage to person or property because of an act or omission of the other party, or of others for whose acts such party is legally responsible, written notice of such injury or damage, whether or not insured, shall be given to the other party within

AIA Document A201™ – 1997. Copyright © 1911, 1915, 1918, 1925, 1937, 1951, 1958, 1961, 1963, 1966, 1970, 1976, 1987 and 1997 by The American Institute of Architects. All rights reserved. WARNING: This AIA® Document is protected by U.S. Copyright Law and International Treaties. Unauthorized reproduction or distribution of this AIA® Document, or any portion of it, may result in severe civil and criminal penalties, and will be prosecuted to the maximum extent possible under the law. This document was produced by AIA software at 20:17:08 on 01/09/2006 under Order No.1000179669_1 which expires on 5/16/2006, and is not for resale.
User Notes: A201-21989 ver. 1 Seismic Retrofit (11/11/05) (1304079764)

a reasonable time not exceeding 21 days after discovery. The notice shall provide sufficient detail to enable the other party to investigate the matter.

§ 4.3.9 If unit prices are stated in the Contract Documents or subsequently agreed upon, and if quantities originally contemplated are materially changed in a proposed Change Order or Construction Change Directive so that application of such unit prices to quantities of Work proposed will cause substantial inequity to the Owner or Contractor, the applicable unit prices shall be equitably adjusted.

§ 4.3.10 [Intentionally Deleted.]

(Paragraphs deleted)

§ 4.4 RESOLUTION OF CLAIMS AND DISPUTES

§ 4.4.1 This Paragraph 4.4 is subject to the Architect's role regarding construction administration services, as described in the Agreement. Owner shall take the initial lead in evaluating any Claims, and the Architect's input may or may not be obtained in connection therewith.

§ 4.4.2 The Architect will review Claims and within ten days of the receipt of the Claim take one or more of the following actions: (1) request additional supporting data from the claimant or a response with supporting data from the other party, (2) reject the Claim in whole or in part, (3) approve the Claim, (4) suggest a compromise, or (5) advise the parties that the Architect is unable to resolve the Claim if the Architect lacks sufficient information to evaluate the merits of the Claim or if the Architect concludes that, in the Architect's sole discretion, it would be inappropriate for the Architect to resolve the Claim.

§ 4.4.3 In evaluating Claims, the Architect may, but shall not be obligated to, consult with or seek information from either party or from persons with special knowledge or expertise who may assist the Architect in reviewing the Claim. The Architect may request the Owner to authorize retention of such persons at the Owner's expense.

§ 4.4.4 If the Architect requests a party to provide a response to a Claim or to furnish additional supporting data, such party shall respond, in writing, within ten days after receipt of such request, and shall either provide a response on the requested supporting data, advise the Architect when the response or supporting data will be furnished or advise the Architect that no supporting data will be furnished. Upon receipt of the response or supporting data, if any, the Architect will issue its recommendation to the Claim.

§ 4.4.5 The Architect will give its recommendation as to the Claim by written notice, which shall state the reasons therefor and which shall notify the parties of any change in the Contract Sum or Contract Time or both. The Architect's recommendation pursuant to this Paragraph 4.4 shall not be binding on the parties.

§ 4.4.6 [Intentionally Deleted.]

§ 4.4.7 Upon receipt of a Claim against the Contractor or at any time thereafter, the Architect or the Owner may, but is not obligated to, notify the surety, if any, of the nature and amount of the Claim. If the Claim relates to a possibility of a Contractor's default, the Architect or the Owner may, but is not obligated to, notify the surety and request the surety's assistance in resolving the controversy.

§ 4.4.8 [Intentionally Deleted.]

§ 4.5 MEDIATION

§ 4.5.1 [Intentionally Deleted.]

§ 4.5.2 [Intentionally Deleted.]

§ 4.5.3 [Intentionally Deleted.]

§ 4.6 ARBITRATION

§ 4.6.1 [Intentionally Deleted.]

§ 4.6.2 [Intentionally Deleted.]

AIA Document A201™ – 1997. Copyright © 1911, 1915, 1918, 1925, 1937, 1951, 1958, 1961, 1963, 1966, 1970, 1976, 1987 and 1997 by The American Institute of Architects. All rights reserved. WARNING: This AIA® Document is protected by U.S. Copyright Law and International Treaties. Unauthorized reproduction or distribution of this AIA® Document, or any portion of it, may result in severe civil and criminal penalties, and will be prosecuted to the maximum extent possible under the law. This document was produced by AIA software at 20:17:08 on 01/09/2006 under Order No.1000179869_1 which expires on 5/16/2006, and is not for resale.
User Notes: A201-21989 ver. 1 Seismic Retrofit (11/11/05) (1304079764)

§ 4.6.3 [Intentionally Deleted.]

§ 4.6.4 [Intentionally Deleted.]

§ 4.6.5 [Intentionally Deleted.]

§ 4.6.6 [Intentionally Deleted.]

ARTICLE 5 SUBCONTRACTORS

§ 5.1 DEFINITIONS

§ 5.1.1 A Subcontractor is a person or entity who has a direct contract with the Contractor to perform a portion of the Work at the site. The term "Subcontractor" is referred to throughout the Contract Documents as if singular in number and means a Subcontractor or an authorized representative of the Subcontractor. The term "Subcontractor" does not include a separate contractor or subcontractors of a separate contractor.

§ 5.1.2 A Sub-subcontractor is a person or entity who has a direct or indirect contract with a Subcontractor to perform a portion of the Work at the site. The term "Sub-subcontractor" is referred to throughout the Contract Documents as if singular in number and means a Sub-subcontractor or an authorized representative of the Sub-subcontractor.

§ 5.2 AWARD OF SUBCONTRACTS AND OTHER CONTRACTS FOR PORTIONS OF THE WORK

§ 5.2.1 Contractor, as soon as practicable after award of the Contract, shall furnish in writing to the Owner, with copies to Architect, the names of persons or entities (including those who are to furnish materials or equipment fabricated to a special design) proposed for each principal portion of the Work. The Owner will promptly reply to the Contractor in writing stating whether or not the Owner, after due investigation, has reasonable objection to any such proposed person or entity. Failure of the Owner to reply within seven (7) days shall constitute notice of no reasonable objection.

§ 5.2.2 The Contractor shall not contract with a proposed person or entity to whom the Owner has made reasonable and timely objection. The Contractor shall not be required to contract with anyone to whom the Contractor has made reasonable objection.

§ 5.2.3 If the Owner has reasonable objection to a person or entity proposed by the Contractor, the Contractor shall propose another to whom the Owner has no reasonable objection. If the proposed but rejected Subcontractor was reasonably capable of performing the Work, the Contract Sum and Contract Time shall be increased or decreased by the difference, if any, occasioned by such change, and an appropriate Change Order shall be issued before commencement of the substitute Subcontractor's Work. However, no increase in the Contract Sum or Contract Time shall be allowed for such change unless the Contractor has acted promptly and responsively in submitting names as required.

§ 5.2.4 The Contractor shall not change a Subcontractor, person or entity previously selected if the Owner makes reasonable objection to such substitute.

§ 5.2.5 All portions of the Work that the Contractor's organization does not perform with its own personnel shall be performed under Subcontracts or by other appropriate agreements with Contractor. Prior to awarding a portion of the Work to any proposed Subcontractor, Contractor shall deliver to Owner a copy of any proposed Subcontractor's bid. All Subcontracts shall conform to the requirements of the Contract Documents. Contractor shall deliver to Owner copies of all Subcontracts both prior to and following their execution.

§ 5.3 SUBCONTRACTUAL RELATIONS

§ 5.3.1 By appropriate agreement, written where legally required for validity, the Contractor shall require each Subcontractor, to the extent of the Work to be performed by the Subcontractor, to be bound to the Contractor by terms of the Contract Documents, and to assume toward the Contractor all the obligations and responsibilities, including the responsibility for safety of the Subcontractor's Work, which the Contractor, by these Documents, assumes toward the Owner. Each subcontract agreement shall provide that Owner is an express third party beneficiary of the subcontract and shall preserve and protect the rights of the Owner under the Contract Documents

AIA Document A201™ – 1997. Copyright © 1911, 1915, 1918, 1925, 1937, 1951, 1958, 1961, 1963, 1966, 1970, 1976, 1987 and 1997 by The American Institute of Architects. All rights reserved. WARNING: This AIA® Document is protected by U.S. Copyright Law and International Treaties. Unauthorized reproduction or distribution of this AIA® Document, or any portion of it, may result in severe civil and criminal penalties, and will be prosecuted to the maximum extent possible under the law. This document was produced by AIA software at 20:17:08 on 01/09/2006 under Order No.1000179669_1 which expires on 5/16/2006, and is not for resale.
User Notes: A201-21989 ver. 1 Seismic Retrofit (11/11/05)

(1304079764)

with respect to the Work to be performed by the Subcontractor so that subcontracting thereof will not prejudice such rights, and shall allow to the Subcontractor, unless specifically provided otherwise in the subcontract agreement, the benefit of all rights, remedies and redress against the Contractor that the Contractor, by the Contract Documents, has against the Owner. Where appropriate, the Contractor shall require each Subcontractor to enter into similar agreements with Sub-subcontractors. The Contractor shall make available to each proposed Subcontractor, prior to the execution of the subcontract agreement, copies of the Contract Documents to which the Subcontractor will be bound, and, upon written request of the Subcontractor, identify to the Subcontractor terms and conditions of the proposed subcontract agreement which may be at variance with the Contract Documents. Subcontractors will similarly make copies of applicable portions of such documents available to their respective proposed Sub-subcontractors.

§ 5.3.2 All Work performed for Contractor by a Subcontractor shall be pursuant to an appropriate written agreement between Contractor and the Subcontractor (and where appropriate between Subcontractors and Sub-subcontractors) which shall include a schedule of value approved by Owner, and which shall contain provisions that:

§ 5.3.2.1 preserve and protect the rights of Owner under the Contract with respect to the Work to be performed under the subcontract so that the subcontracting thereof will not prejudice such right;

§ 5.3.2.2 require such Work be performed in accordance with the requirements of the Contract Documents;

§ 5.3.2.3 include the Subcontractor's acknowledgment that Contractor has assigned its interest in the subcontract to Owner, which assignment shall become effective upon Contractor's default under the Contract Documents and Subcontractor's receipt of notification from Owner that (a) Contractor is in default under the Contract Documents or Owner has terminated the Contract; and (b) the assignment is effective;

§ 5.3.2.4 require submission to Contractor of applications for payment under each subcontract to which Contractor is a party, in reasonable time to enable the Contractor to apply for payment in accordance with Article 9 of the General Conditions and Article 12 of the Agreement;

§ 5.3.2.5 require that all claims for additional costs, extensions of time, damages for delays or otherwise with respect to subcontracted portions of the Work shall be submitted to Contractor (via any Subcontractor or Sub-subcontractor where appropriate) in sufficient time so that Contractor may comply in the manner provided in the Contract Documents for like claims by Contractor upon Owner;

§ 5.3.2.6 waive all rights Contractor and Subcontractor may have against one another for damages caused by fire or other perils covered by property insurance; and

§ 5.3.2.7 limit the amount which the Subcontractor may charge for overhead and profit in connection with a change in the Work to ten percent (10%) of the Subcontractor's cost of performing the change.

§ 5.4 CONTINGENT ASSIGNMENT OF SUBCONTRACTS

§ 5.4.1 Each subcontract agreement for a portion of the Work is assigned by the Contractor to the Owner provided that:

.1 assignment is effective only after termination of the Contract by the Owner pursuant to Article 14, and only for those subcontract agreements which the Owner accepts by notifying the Subcontractor and Contractor in writing.

.2

§ 5.4.2 [Intentionally Deleted.]

ARTICLE 6 CONSTRUCTION BY OWNER OR BY SEPARATE CONTRACTORS

§ 6.1 OWNER'S RIGHT TO PERFORM CONSTRUCTION AND TO AWARD SEPARATE CONTRACTS

§ 6.1.1 The Owner reserves the right to perform construction or operations related to the Project with the Owner's own forces, and to award separate contracts in connection with other portions of the Project or other construction or operations on the site under Conditions of the Contract identical or substantially similar to these including those portions related to insurance and waiver of subrogation. If the Contractor claims that delay or additional cost is involved because of such action by the Owner, the Contractor shall make such Claim as provided in Section 4.3.

AIA Document A201™ – 1997. Copyright © 1911, 1915, 1918, 1925, 1937, 1951, 1958, 1961, 1963, 1966, 1970, 1976, 1987 and 1997 by The American Institute of Architects. All rights reserved. WARNING: This AIA® Document is protected by U.S. Copyright Law and International Treaties. Unauthorized reproduction or distribution of this AIA® Document, or any portion of it, may result in severe civil and criminal penalties, and will be prosecuted to the maximum extent possible under the law. This document was produced by AIA software at 20:17:08 on 01/09/2006 under Order No.1000179669_1 which expires on 5/16/2006, and is not for resale.
User Notes: A201-21989 ver. 1 Seismic Retrofit (11/11/05) (1304079764)

§ 6.1.2 When separate contracts are awarded for different portions of the Project or other construction or operations on the site, the term "Contractor" in the Contract Documents in each case shall mean the Contractor who executes each separate Owner-Contractor Agreement.

§ 6.1.3 The Owner shall provide for coordination of the activities of the Owner's own forces and of each separate contractor with the Work of the Contractor, who shall cooperate with them. The Contractor shall participate with other separate contractors and the Owner in reviewing their construction schedules when directed to do so. The Contractor shall make any revisions to the construction schedule deemed necessary after a joint review and mutual agreement. The construction schedules shall then constitute the schedules to be used by the Contractor, separate contractors and the Owner until subsequently revised.

§ 6.1.4 Unless otherwise provided in the Contract Documents, when the Owner performs construction or operations related to the Project with the Owner's own forces, the Owner shall be deemed to be subject to the same obligations and to have the same rights which apply to the Contractor under the Conditions of the Contract, including, without excluding others, those stated in Article 3, this Article 6 and Articles 10, 11 and 12.

§ 6.2 MUTUAL RESPONSIBILITY

§ 6.2.1 The Contractor shall afford the Owner and separate contractors reasonable opportunity for introduction and storage of their materials and equipment and performance of their activities, and shall connect and coordinate the Contractor's construction and operations with theirs as required by the Contract Documents.

§ 6.2.2 If part of the Contractor's Work depends for proper execution or results upon construction or operations by the Owner or a separate contractor, the Contractor shall, prior to proceeding with that portion of the Work, promptly report to the Owner and Architect apparent discrepancies or defects in such other construction that would render it unsuitable for such proper execution and results. Failure of the Contractor so to report shall constitute an acknowledgment that the Owner's or separate contractor's completed or partially completed construction is fit and proper to receive the Contractor's Work, except as to defects not then reasonably discoverable.

§ 6.2.3 The Owner shall be reimbursed by the Contractor for costs incurred by the Owner which are payable to a separate contractor because of delays, improperly timed activities or defective construction of the Contractor. The Owner shall be responsible to the Contractor for costs incurred by the Contractor because of delays, improperly timed activities, damage to the Work or defective construction of a separate contractor.

§ 6.2.4 The Contractor shall promptly remedy damage caused by the Contractor or its Subcontractors of every tier to completed or partially completed construction or to property of the Owner or separate contractors as provided in Section 10.2.5.

§ 6.2.5 The Owner and each separate contractor shall have the same responsibilities for cutting and patching as are described for the Contractor in Section 3.14.

§ 6.3 OWNER'S RIGHT TO CLEAN UP

§ 6.3.1 If a dispute arises among the Contractor, separate contractors and the Owner as to the responsibility under their respective contracts for maintaining the premises and surrounding area free from waste materials and rubbish, the Owner may clean up and will allocate the cost among those responsible.

ARTICLE 7 CHANGES IN THE WORK

§ 7.1 GENERAL

§ 7.1.1 Changes in the Work may be accomplished after execution of the Contract, and without invalidating the Contract, by Change Order, Construction Change Directive or order for a minor change in the Work, subject to the limitations stated in this Article 7 and elsewhere in the Contract Documents.

§ 7.1.2 A Change Order shall be based upon agreement among the Owner, Owner's Lender (if required) and Contractor; a Construction Change Directive requires written authorization by the Owner and may or may not be agreed to by the Contractor; an order for a minor change in the Work may be issued by the Owner alone.

AIA Document A201™ – 1997. Copyright © 1911, 1915, 1918, 1925, 1937, 1951, 1958, 1961, 1963, 1966, 1970, 1976, 1987 and 1997 by The American Institute of Architects. All rights reserved. WARNING: This AIA® Document is protected by U.S. Copyright Law and International Treaties. Unauthorized reproduction or distribution of this AIA® Document, or any portion of it, may result in severe civil and criminal penalties, and will be prosecuted to the maximum extent possible under the law. This document was produced by AIA software at 20:17:08 on 01/09/2006 under Order No.1000179669_1 which expires on 5/16/2006, and is not for resale.
User Notes: A201-21989 ver. 1 Seismic Retrofit (11/11/05)
(1304079764)

§ 7.1.3 Changes in the Work shall be performed under applicable provisions of the Contract Documents, and the Contractor shall proceed promptly, unless otherwise provided in the Change Order, Construction Change Directive or order for a minor change in the Work.

§ 7.1.4 Owner shall order changes in the Work by giving Contractor a written change order request ("Change Order Request"), setting forth in detail the nature of the requested change. Contractor shall, as soon as reasonably possible, but not later than ten (10) days following receipt of a Change Order Request, furnish to Owner a statement setting forth in detail, with suitable breakdown by trades and work classifications, the changes, if any, in the Guaranteed Maximum Price attributable to the changes set forth in such Change Order Request, the proposed adjustment, if any, to the Contract Time resulting from such Change Order Request and any proposed adjustments of time and costs related to unchanged Work resulting from such Change Order Request. If Owner approves such changes in writing, a change order ("Change Order") shall be executed and the Guaranteed Maximum Price and Contract Time shall be adjusted as set forth in such Change Order. Failure to agree on the price of any Change Order shall not excuse Contractor from proceeding with the prosecution of the Work as changed (provided Owner issues a Construction Change Directive) for an amount equal to the amount undisputed by Owner for such a Change Order, with Contractor reserving its rights to claim additional compensation for the disputed portion of such Change Order work.

§ 7.2 CHANGE ORDERS

§ 7.2.1 A Change Order is a written instrument prepared by the Contractor and signed by the Owner and Contractor, stating their agreement upon all of the following:

.1 change in the Work;
.2 the amount of the adjustment, if any, in the Contract Sum; and
.3 the extent of the adjustment, if any, in the Contract Time.

§ 7.2.2 Methods used in determining adjustments to the Contract Sum may include those listed in Section 7.3.3.

§ 7.2.3 Agreement on any Change Order shall constitute a final settlement of all matters relating to the change in the Work which is the subject of the Change Order, including, but not limited to, all direct and indirect costs associated with such change and any and all adjustments to the Guaranteed Maximum Price and the Contract Time. In the event a Change Order increases the Guaranteed Maximum Price, Contractor shall include the Work covered by such Change Orders in Applications for Payment as if such Work were originally part of the Contract Documents.

§ 7.3 CONSTRUCTION CHANGE DIRECTIVES

§ 7.3.1 A Construction Change Directive is a written order prepared by the Architect and signed by the Owner, directing a change in the Work prior to agreement on adjustment, if any, in the Contract Sum or Contract Time, or both. The Owner may by Construction Change Directive, without invalidating the Contract, order changes in the Work within the general scope of the Contract consisting of additions, deletions or other revisions, the Contract Sum and Contract Time being adjusted accordingly.

§ 7.3.2 A Construction Change Directive shall be used in the absence of total agreement on the terms of a Change Order.

§ 7.3.3 If the Construction Change Directive provides for an adjustment to the Contract Sum, the adjustment shall be based on one of the following methods designated by Owner, at its option:

.1 mutual acceptance of a lump sum properly itemized and supported by sufficient substantiating data to permit evaluation;
.2 unit prices stated in the Contract Documents or subsequently agreed upon;
.3 cost to be determined in a manner agreed upon by the parties; or
.4 as provided in Section 7.3.6.

§ 7.3.4 Upon receipt of a Construction Change Directive, the Contractor shall promptly proceed with the change in the Work involved and advise the Architect and Owner of the Contractor's agreement or disagreement with the method, if any, provided in the Construction Change Directive for determining the proposed adjustment in the Contract Sum or Contract Time.

AIA Document A201™ – 1997. Copyright © 1911, 1915, 1918, 1925, 1937, 1951, 1958, 1961, 1963, 1966, 1970, 1976, 1987 and 1997 by The American Institute of Architects. All rights reserved. WARNING: This AIA® Document is protected by U.S. Copyright Law and International Treaties. Unauthorized reproduction or distribution of this AIA® Document, or any portion of it, may result in severe civil and criminal penalties, and will be prosecuted to the maximum extent possible under the law. This document was produced by AIA software at 20:17:08 on 01/09/2008 under Order No.1000179669_1 which expires on 5/16/2006, and is not for resale.
User Notes: A201-21989 ver. 1 Seismic Retrofit (11/11/05)
(1304079764)

§ 7.3.5 A Construction Change Directive signed by the Contractor indicates the agreement of the Contractor therewith, including adjustment in Contract Sum and Contract Time or the method for determining them. Such agreement shall be effective immediately and shall be recorded as a Change Order.

§ 7.3.6 If the Contractor does not respond promptly or disagrees with the method for adjustment in the Contract Sum, the method and the adjustment shall be suggested by the Owner on the basis of reasonable expenditures and savings of those performing the Work attributable to the change. In such case, and also under Section 7.3.3.3, the Contractor shall keep and present, in such form as the Architect and Owner may prescribe, an itemized accounting together with appropriate supporting data. Unless otherwise provided in the Contract Documents, costs for the purposes of this Section 7.3.6 shall be limited to the following:

.1 costs of labor, including social security, old age and unemployment insurance, fringe benefits required by agreement or custom, and workers' compensation insurance;

.2 costs of materials, supplies and equipment, including cost of transportation, whether incorporated or consumed;

.3 rental costs of machinery and equipment, exclusive of hand tools, whether rented from the Contractor or others; and

.4 costs of premiums for all bonds and insurance, permit fees, and sales, use or similar taxes related to the Work.

.5 [Intentionally Deleted.]

§ 7.3.7 The amount of credit to be allowed by the Contractor to the Owner for a deletion or change which results in a net decrease in the Contract Sum shall be actual net cost.

§ 7.3.8 Pending final determination of the total cost of a Construction Change Directive to the Owner, amounts not in dispute for such changes in the Work shall be included in Applications for Payment accompanied by a Change Order indicating the parties' agreement with part or all of such costs.

§ 7.3.9 When the Owner and Contractor agree concerning the adjustments in the Contract Sum and Contract Time, or otherwise reach agreement upon the adjustments, such agreement shall be effective immediately and shall be recorded by preparation and execution of an appropriate Change Order.

§ 7.4 MINOR CHANGES IN THE WORK

§ 7.4.1 The Owner will have authority to order minor changes in the Work not involving adjustment in the Contract Sum or extension of the Contract Time and not inconsistent with the intent of the Contract Documents. Such changes shall be effected by written order and shall be binding on the Owner and Contractor. The Contractor shall carry out such written orders promptly.

ARTICLE 8 TIME

§ 8.1 DEFINITIONS

§ 8.1.1 Unless otherwise provided, Contract Time is the period of time, including authorized adjustments, allotted in the Contract Documents for Substantial Completion of the Work.

§ 8.1.2 The date of commencement of the Work is the date established in the Agreement.

§ 8.1.3 The date of Substantial Completion is the date certified by the Architect in accordance with Section 9.8.

§ 8.1.4 The term "day" as used in the Contract Documents shall mean calendar day unless otherwise specifically defined.

§ 8.2 PROGRESS AND COMPLETION

§ 8.2.1 Time limits stated in the Contract Documents are of the essence of the Contract. By executing the Agreement the Contractor confirms that the Contract Time is a reasonable period for performing the Work.

§ 8.2.2 The Contractor shall not knowingly, except by agreement or instruction of the Owner in writing, prematurely commence operations on the site or elsewhere prior to the effective date of insurance required by Article 11 to be furnished by the Contractor. The date of commencement of the Work shall not be changed by the effective date of such insurance. Unless the date of commencement is established by the Contract Documents or a notice to proceed

AIA Document A201™ – 1997. Copyright © 1911, 1915, 1918, 1925, 1937, 1951, 1958, 1961, 1963, 1966, 1970, 1976, 1987 and 1997 by The American Institute of Architects. All rights reserved. WARNING: This AIA® Document is protected by U.S. Copyright Law and International Treaties. Unauthorized reproduction or distribution of this AIA® Document, or any portion of it, may result in severe civil and criminal penalties, and will be prosecuted to the maximum extent possible under the law. This document was produced by AIA software at 20:17:08 on 01/09/2006 under Order No.1000179669_1 which expires on 5/16/2006, and is not for resale.
User Notes: A201-21989 ver. 1 Seismic Retrofit (11/11/05)

given by the Owner, the Contractor shall notify the Owner in writing not less than five days or other agreed period before commencing the Work to permit the timely filing of mortgages, mechanic's liens and other security interests.

§ 8.2.3 The Contractor shall proceed expeditiously with adequate forces and shall achieve Substantial Completion within the Contract Time.

§ 8.3 DELAYS AND EXTENSIONS OF TIME

§ 8.3.1 If the Contractor is actually delayed at any time in the commencement or progress of the Work by an act or neglect of the Owner or Architect, or of an employee of either, or of a separate contractor employed by the Owner, or by changes ordered in the Work, or by labor disputes, fire, unusual delay in deliveries, unavoidable casualties or other causes beyond the Contractor's control, or by delay authorized by the Owner pending judicial reference proceeding, or by other causes which may justify delay, then the Contract Time shall be extended by Change Order for such reasonable time as the Owner may determine. Contractor acknowledges and agrees that the schedule contains nine (9) days of rain delays. Thus the Contract Time shall not be adjusted due to rain delays for the first nine (9) days of rain delays.

§ 8.3.2 Extension of time shall be Contractor's sole remedy for the first twenty-one (21) days of delay described in Subparagraph 8.3.1, above. Contractor shall receive additional compensation for each day of such delay beyond the twenty-first (21st) day of such delay, in an amount equal to Contractor's reasonable administrative and jobsite costs actually incurred, but not to exceed $1,800 per day.

§ 8.3.3 [Intentionally Deleted.]

ARTICLE 9 PAYMENTS AND COMPLETION

§ 9.1 CONTRACT SUM

§ 9.1.1 The Contract Sum is stated in the Agreement and, including authorized adjustments, is the total amount payable by the Owner to the Contractor for performance of the Work under the Contract Documents.

§ 9.2 SCHEDULE OF VALUES

§ 9.2.1 Before the first Application for Payment, the Contractor shall submit to the Owner for its review, a schedule of values allocated to various portions of the Work, prepared in such form and supported by such data to substantiate its accuracy as the Owner may require. This schedule, unless objected to by the Owner, shall be used as a basis for reviewing the Contractor's Applications for Payment.

§ 9.3 APPLICATIONS FOR PAYMENT

§ 9.3.1 On or before the 15th day of the month, Contractor shall submit to Owner and Architect an itemized Application for Payment for operations completed in accordance with the schedule of values. Such application shall be notarized, and supported by such data substantiating the Contractor's right to payment as the Owner, Lender or Architect may require, such as copies of requisitions from Subcontractors and material suppliers, and reflecting retainage if provided for in the Contract Documents. Prior to submitting the Application for Payment, Owner and Contractor shall conduct a walk-through of the Project to determine the percentage of completion.

§ 9.3.1.1 As provided in Section 7.3.8, such applications may include requests for payment on account of changes in the Work which have been properly performed and authorized by Construction Change Directives, or by interim determinations of the Architect, but not yet included in Change Orders.

§ 9.3.1.2 Such applications may not include requests for payment for portions of the Work for which the Contractor does not intend to pay to a Subcontractor or material supplier, unless such Work has been performed by others whom the Contractor intends to pay.

§ 9.3.2 Unless otherwise provided in the Contract Documents, payments shall be made on account of materials and equipment delivered and suitably stored at the site for subsequent incorporation in the Work. If approved in writing and in advance by the Owner and Lender if any, payment may similarly be made for materials and equipment suitably stored off the site at a location agreed upon in writing. Payment for materials and equipment stored on or off the site shall be conditioned upon compliance by the Contractor with procedures satisfactory to the Owner and Lender if any, to establish the Owner's title to such materials and equipment or otherwise protect the Owner's

AIA Document A201™ – 1997. Copyright © 1911, 1915, 1918, 1925, 1937, 1951, 1958, 1961, 1963, 1966, 1970, 1976, 1987 and 1997 by The American Institute of Architects. All rights reserved. WARNING: This AIA® Document is protected by U.S. Copyright Law and International Treaties. Unauthorized reproduction or distribution of this AIA® Document, or any portion of it, may result in severe civil and criminal penalties, and will be prosecuted to the maximum extent possible under the law. This document was produced by AIA software at 20:17:08 on 01/09/2006 under Order No.1000179669_1 which expires on 5/16/2006, and is not for resale.
User Notes: A201-21989 ver. 1 Seismic Retrofit (11/11/05)
(1304079764)

interest, and shall include the costs of applicable insurance, storage and transportation to the site for such materials and equipment stored off the site in third party warehouses.

§ 9.3.3 The Contractor warrants that title to all Work covered by an Application for Payment will pass to the Owner no later than the time of payment. The Contractor further warrants that upon submittal of an Application for Payment all Work for which Certificates for Payment have been previously issued and payments received from the Owner shall, to the best of the Contractor's knowledge, information and belief, be free and clear of liens, claims, security interests or encumbrances in favor of the Contractor, Subcontractors, material suppliers, or other persons or entities making a claim by reason of having provided labor, materials and equipment relating to the Work.

§ 9.4 CERTIFICATES FOR PAYMENT

§ 9.4.1 The Architect will, within seven days after receipt of the Contractor's Application for Payment, either issue to the Owner a Certificate for Payment, with a copy to the Contractor, for such amount as the Architect determines is properly due, or notify the Contractor and Owner in writing of the Architect's reasons for withholding certification in whole or in part as provided in Section 9.5.1.

§ 9.4.2 The issuance of a Certificate for Payment will constitute a representation by the Architect to the Owner, based on the Architect's evaluation of the Work and the data comprising the Application for Payment, that the Work has progressed to the point indicated and that, to the best of the Architect's knowledge, information and belief, the quality of the Work is in accordance with the Contract Documents. The foregoing representations are subject to an evaluation of the Work for conformance with the Contract Documents upon Substantial Completion, to results of subsequent tests and inspections, to correction of minor deviations from the Contract Documents prior to completion and to specific qualifications expressed by the Architect. The issuance of a Certificate for Payment will further constitute a representation that the Contractor is entitled to payment in the amount certified. However, the issuance of a Certificate for Payment will not be a representation that the Architect has (1) made exhaustive or continuous on-site inspections to check the quality or quantity of the Work, (2) reviewed construction means, methods, techniques, sequences or procedures, (3) reviewed copies of requisitions received from Subcontractors and material suppliers and other data requested by the Owner to substantiate the Contractor's right to payment, or (4) made examination to ascertain how or for what purpose the Contractor has used money previously paid on account of the Contract Sum.

§ 9.5 DECISIONS TO WITHHOLD CERTIFICATION

§ 9.5.1 The Architect may withhold a Certificate for Payment in whole or in part, to the extent reasonably necessary to protect the Owner, if in the Architect's opinion the representations to the Owner required by Section 9.4.2 cannot be made. If the Architect is unable to certify payment in the amount of the Application, the Architect will notify the Contractor and Owner as provided in Section 9.4.1. If the Contractor and Architect cannot agree on a revised amount, the Architect will promptly issue a Certificate for Payment for the amount for which the Architect is able to make such representations to the Owner. The Architect may also withhold a Certificate for Payment or, because of subsequently discovered evidence, may nullify the whole or a part of a Certificate for Payment previously issued, to such extent as may be necessary in the Architect's opinion to protect the Owner from loss for which the Contractor is responsible, including loss resulting from acts and omissions described in Section 3.3.2, because of:

.1 defective Work not remedied;
.2 third party claims filed or reasonable evidence indicating probable filing of such claims unless security acceptable to the Owner is provided by the Contractor;
.3 failure of the Contractor to make payments properly to Subcontractors or for labor, materials or equipment;
.4 reasonable evidence that the Work cannot be completed for the unpaid balance of the Contract Sum;
.5 damage to the Owner or another contractor;
.6 reasonable evidence that the Work will not be completed within the Contract Time, and that the unpaid balance would not be adequate to cover actual or liquidated damages for the anticipated delay; or
.7 failure to carry out the Work in accordance with the Contract Documents.

Notwithstanding the issuance of a Certificate for Payment, the Owner, may withhold payment for the reasons described in Subparagraphs 9.5.1.1 - 9.5.1.7.

§ 9.5.2 When the above reasons for withholding certification are removed, certification will be made for amounts previously withheld.

AIA Document A201™ – 1997. Copyright © 1911, 1915, 1918, 1925, 1937, 1951, 1958, 1961, 1963, 1966, 1970, 1976, 1987 and 1997 by The American Institute of Architects. All rights reserved. WARNING: This AIA® Document is protected by U.S. Copyright Law and International Treaties. Unauthorized reproduction or distribution of this AIA® Document, or any portion of it, may result in severe civil and criminal penalties, and will be prosecuted to the maximum extent possible under the law. This document was produced by AIA software at 20:17:08 on 01/09/2006 under Order No.1000179669_1 which expires on 5/16/2006, and is not for resale.
User Notes: A201-21989 ver. 1 Seismic Retrofit (11/11/05)
(1304079764)

§ 9.6 PROGRESS PAYMENTS

§ 9.6.1 After the Architect has issued a Certificate for Payment, the Owner shall make payment in the manner and within the time provided in the Contract Documents, and shall so notify the Architect.

§ 9.6.2 The Contractor shall promptly pay each Subcontractor, upon receipt of payment from the Owner, out of the amount paid to the Contractor on account of such Subcontractor's portion of the Work, the amount to which said Subcontractor is entitled, reflecting percentages actually retained from payments to the Contractor on account of such Subcontractor's portion of the Work. The Contractor shall, by appropriate agreement with each Subcontractor, require each Subcontractor to make payments to Sub-subcontractors in a similar manner. Should Contractor neglect or refuse to cause to be paid promptly any bill or charge legitimately incurred by it, Owner shall have the right , but not the obligation, to pay the bill directly following consultation with Contractor, and Contractor shall immediately reimburse Owner for same. If Contractor does not reimburse Owner, Owner may offset the amount of the bill against amounts owed by Owner to Contractor hereunder.

§ 9.6.3 The Architect will, on request, furnish to a Subcontractor, if practicable, information regarding percentages of completion or amounts applied for by the Contractor and action taken thereon by the Architect and Owner on account of portions of the Work done by such Subcontractor.

§ 9.6.4 Neither the Owner nor Architect shall have an obligation to pay or to see to the payment of money to a Subcontractor except as may otherwise be required by law.

§ 9.6.5 Payment to material suppliers shall be treated in a manner similar to that provided in Sections 9.6.2, 9.6.3 and 9.6.4.

§ 9.6.6 A Certificate for Payment, a progress payment, or partial or entire use or occupancy of the Project by the Owner shall not constitute acceptance of Work not in accordance with the Contract Documents.

§ 9.6.7 Unless the Contractor provides the Owner with a payment bond in the full penal sum of the Contract Sum, payments received by the Contractor for Work properly performed by Subcontractors and suppliers shall be held by the Contractor for those Subcontractors or suppliers who performed Work or furnished materials, or both, under contract with the Contractor for which payment was made by the Owner. Nothing contained herein shall require money to be placed in a separate account and not commingled with money of the Contractor, shall create any fiduciary liability or tort liability on the part of the Contractor for breach of trust or shall entitle any person or entity to an award of punitive damages against the Contractor for breach of the requirements of this provision.

§ 9.6.8 With each Application for Payment, Contractor shall furnish a conditional waiver and release of lien for itself, each Subcontractor who furnished labor, equipment, materials or services to the Project, and each materialman and vendor who furnished materials to the Project during the period covered by the Application for Payment. Upon each payment by Owner, Contractor shall execute and notarize if required, and cause all such materialman, vendors and Subcontractors to execute an unconditional waiver and release of lien acknowledging receipt of all payments due through the period covered by the previous Application for Payment. The conditional and unconditional lien releases shall be in the form of Exhibit "C" to the Agreement, and provided Owner is making progress payments in accordance with the Contract Documents, Contractor shall deliver the executed unconditional releases to Owner with its next succeeding Application for Payment, including the Final Application for Payment to assure an effective waiver of mechanics' or materialmen's liens in compliance with the laws of the State of California. In addition to providing lien releases, and provided Owner is making payments to Contractor in accordance with the Contract Documents, Contractor shall indemnify and hold Owner and Lender harmless from and against any and all liens and charges of every type, nature, kind or description which may at any time be filed or claimed against the Project, or any potion thereof, or the improvements situated thereon, including attorneys' fees, as a consequence, direct or indirect, of any act or omission of Contractor, its agents, servants, employees, suppliers, subcontractors, or any or all of them. From time to time as reasonably required by Owner or Lender, Contractor shall furnish to Owner and Lender an affidavit, subordination and lien waiver agreement executed by Contractor and each Subcontractor which has furnished and supplied or will furnish or supply materials and services in connection with the prosecution of the Work, which agreement shall be in form and substance satisfactory to Owner and Lender. To the extent not inconsistent with existing law, each party executing such agreement shall agree to subordinate all of its liens for Work to be performed or materials to be furnished pursuant to the Contract Documents to the liens and security

AIA Document A201™ – 1997. Copyright © 1911, 1915, 1918, 1925, 1937, 1951, 1958, 1961, 1963, 1966, 1970, 1976, 1987 and 1997 by The American Institute of Architects. All rights reserved. WARNING: This AIA® Document is protected by U.S. Copyright Law and International Treaties. Unauthorized reproduction or distribution of this AIA® Document, or any portion of it, may result in severe civil and criminal penalties, and will be prosecuted to the maximum extent possible under the law. This document was produced by AIA software at 20:17:08 on 01/09/2006 under Order No.1000179669_1 which expires on 5/16/2006, and is not for resale.
User Notes: A201-21989 ver. 1 Seismic Retrofit (11/11/05)

interests securing payment of any loan made for the Project by Lender, and shall furnish a release of all liens for Work performed and materials furnished up to the date of execution of such agreement to the extent such party has been paid. Further, each such party shall certify that all amounts owing to such party for the Work through the date of such agreement have been paid in full, or if not paid in full, such agreement shall set forth such amounts which have not been paid through the date of such agreement.

§ 9.6.9 Provided Owner is making payments to Contractor in accordance with the Contract Documents, if any lien, stop notice or claim is recorded or served in connection with the Work, Contractor shall, immediately and at its own expense, record or file, or cause to be recorded or filed, in the office of the county recorder in which the lien or claim was recorded, or with the person(s) on whom the stop notice was served, a bond executed by a good and sufficient surety, and approved by Owner, in a sum equal to one hundred fifty (150%) of the amount of such lien, stop notice or claim, which bond shall guarantee the payment of any amounts which the claimant may recover on the lien, stop notice or claim, together with the claimant's costs of suit in the action if the claimant recovers therein.

§ 9.6.10 Provided Owner is making payments to Contractor in accordance with the Contract Documents, if Contractor fails to cause any lien to be removed from the Project or any stop notices or other notices to be negated, Owner may employ whatever means it may, in its sole discretion, to cause the lien to be removed, and the effect of any stop notices or other notices to be negated. Contractor shall, upon demand, reimburse Owner for all costs, including without limitation actual attorneys' fees incurred by Owner in connection with any suit, lien or stop notice. Owner may offset any such costs against amounts otherwise owing to Contractor hereunder.

§ 9.7 FAILURE OF PAYMENT

§ 9.7.1 If Owner fails to make payment to Contractor with respect to any amounts that are not in dispute between Owner and Contractor within the time periods for payment as set forth in the Contract Documents, Contractor, upon fifteen (15) days prior written notice to Owner, may stop the Work and thereby terminate the Contract, unless within such fifteen (15) days payment is made to Contractor of all undisputed amounts and Owner's good faith basis for contesting any disputed amounts is delivered to Contractor. If Contractor so terminates the Contract, Contractor's exclusive remedies will be governed by Subparagraph 14.1.3, below.

§ 9.7.2 If Owner is entitled to reimbursement or payment from Contractor under or pursuant to the Contract Documents, such payments shall be made promptly upon demand by Owner. Notwithstanding anything contained in the Contract Documents to the contrary, if Contractor fails to promptly make any payment due Owner, or Owner incurs any costs and expenses to cure any default of Contractor or to correct defective Work, Owner shall have an absolute right to offset such amount against the Guaranteed Maximum Price and may, in Owner's sole discretion, elect either to: (1) deduct an amount equal to that which Owner is entitled from any payment then or thereafter due Contractor from Owner, or (2) issue a written notice to Contractor reducing the Guaranteed Maximum Price by an amount equal to that which Owner is entitled.

§ 9.8 SUBSTANTIAL COMPLETION

§ 9.8.1 Substantial Completion is the stage in the progress of the Work when the Work or designated portion thereof is sufficiently complete in accordance with the Contract Documents so that the Owner can occupy or utilize the Work for its intended use and a temporary certificate of occupancy (or its functional equivalent) has been issued by the appropriate governmental agency. Substantial Completion may occur in phases, as shown in the Schedule.

§ 9.8.2 When the Contractor considers that the Work, or a portion thereof which the Owner agrees to accept separately, is substantially complete, the Contractor shall prepare and submit to the Owner and Architect a comprehensive list of items to be completed or corrected prior to final payment. Failure to include an item on such list does not alter the responsibility of the Contractor to complete all Work in accordance with the Contract Documents.

§ 9.8.3 Upon receipt of the Contractor's list, the Owner and Architect will make an inspection to determine whether the Work or designated portion thereof is substantially complete. If the Architect's inspection discloses any item, whether or not included on the Contractor's list, which is not sufficiently complete in accordance with the Contract Documents so that the Owner can occupy or utilize the Work or designated portion thereof for its intended use, the Contractor shall, before issuance of the Certificate of Substantial Completion, complete or correct such item upon notification by the Architect. In such case, the Contractor shall then submit a request for another inspection to determine Substantial Completion.

AIA Document A201™ – 1997. Copyright © 1911, 1915, 1918, 1925, 1937, 1951, 1958, 1961, 1963, 1966, 1970, 1976, 1987 and 1997 by The American Institute of Architects. All rights reserved. WARNING: This AIA® Document is protected by U.S. Copyright Law and International Treaties. Unauthorized reproduction or distribution of this AIA® Document, or any portion of it, may result in severe civil and criminal penalties, and will be prosecuted to the maximum extent possible under the law. This document was produced by AIA software at 20:17:08 on 01/09/2006 under Order No.1000179669_1 which expires on 5/16/2006, and is not for resale.
User Notes: A201-21989 ver. 1 Seismic Retrofit (11/11/05)

(1304079764)

§ 9.8.4 When the Work or designated portion thereof is substantially complete, the Architect will prepare a Certificate of Substantial Completion which shall establish the date of Substantial Completion, shall establish responsibilities of the Owner and Contractor for security, maintenance, heat, utilities, damage to the Work and insurance, and shall fix the time within which the Contractor shall finish all items on the list accompanying the Certificate. Warranties required by the Contract Documents shall commence on the date of Substantial Completion of the Work or designated portion thereof unless otherwise provided in the Certificate of Substantial Completion.

§ 9.8.5 The Certificate of Substantial Completion shall be submitted to the Owner and Contractor for their written acceptance of responsibilities assigned to them in such Certificate.

§ 9.9 PARTIAL OCCUPANCY OR USE

§ 9.9.1 The Owner may occupy or use any completed or partially completed portion of the Work at any stage when such portion is designated by separate agreement with the Contractor, provided such occupancy or use is consented to by the insurer as required under Section 11.4.1.5 and authorized by public authorities having jurisdiction over the Work. Such partial occupancy or use may commence whether or not the portion is substantially complete, provided the Owner and Contractor have accepted in writing the responsibilities assigned to each of them for payments, retainage, if any, security, maintenance, heat, utilities, damage to the Work and insurance, and have agreed in writing concerning the period for correction of the Work and commencement of warranties required by the Contract Documents. When the Contractor considers a portion substantially complete, the Contractor shall prepare and submit a list to the Architect as provided under Section 9.8.2. Consent of the Contractor to partial occupancy or use shall not be unreasonably withheld. The stage of the progress of the Work shall be determined by written agreement between the Owner and Contractor.

§ 9.9.2 Immediately prior to such partial occupancy or use, the Owner, Owner's representative, Contractor and Architect shall jointly inspect the area to be occupied or portion of the Work to be used in order to determine and record the condition of the Work.

§ 9.9.3 Unless otherwise agreed upon, partial occupancy or use of a portion or portions of the Work shall not constitute acceptance of Work not complying with the requirements of the Contract Documents.

§ 9.10 FINAL COMPLETION AND FINAL PAYMENT

§ 9.10.1 Upon receipt of written notice that the Work is ready for final inspection and acceptance and upon receipt of a final Application for Payment, the Owner and Architect will promptly make such inspection and, when they find the Work acceptable under the Contract Documents and the Contract fully performed, the Architect will promptly issue a final Certificate for Payment stating that to the best of the Architect's knowledge, information and belief, and on the basis of the Architect's on-site visits and inspections, the Work has been completed in accordance with terms and conditions of the Contract Documents and that the entire balance found to be due the Contractor and noted in the final Certificate is due and payable. The Architect's final Certificate for Payment will constitute a further representation that conditions listed in Section 9.10.2 as precedent to the Contractor's being entitled to final payment have been fulfilled.

§ 9.10.2 Neither final payment nor any remaining retained percentage shall become due until the Contractor submits to the Owner (1) an affidavit that payrolls, bills for materials and equipment, and other indebtedness connected with the Work for which the Owner or the Owner's property might be responsible or encumbered (less amounts withheld by Owner) have been paid or otherwise satisfied, (2) a certificate evidencing that insurance required by the Contract Documents to remain in force after final payment is currently in effect and will not be canceled or allowed to expire until at least 30 days' prior written notice has been given to the Owner, (3) a written statement that the Contractor knows of no substantial reason that the insurance will not be renewable to cover the period required by the Contract Documents, (4) consent of surety, if any, to final payment, (5) if required by the Owner, other data establishing payment or satisfaction of obligations, such as receipts, releases and waivers of liens, claims, security interests or encumbrances arising out of the Contract, to the extent and in such form as may be designated by the Owner, and (6) all warranties, guarantees, operating manuals and "AS BUILT" record drawings for the Project on CAD. If a Subcontractor refuses to furnish a release or waiver required by the Owner, the Contractor may furnish a bond satisfactory to the Owner to indemnify the Owner against such lien. If such lien remains unsatisfied after payments are made, the Contractor shall refund to the Owner all money that the Owner may be compelled to pay in discharging such lien, including all costs and reasonable attorneys' fees.

AIA Document A201™ – 1997. Copyright © 1911, 1915, 1918, 1925, 1937, 1951, 1958, 1961, 1963, 1966, 1970, 1976, 1987 and 1997 by The American Institute of Architects. All rights reserved. WARNING: This AIA® Document is protected by U.S. Copyright Law and International Treaties. Unauthorized reproduction or distribution of this AIA® Document, or any portion of it, may result in severe civil and criminal penalties, and will be prosecuted to the maximum extent possible under the law. This document was produced by AIA software at 20:17:08 on 01/09/2006 under Order No.1000179669_1 which expires on 5/16/2006, and is not for resale.
User Notes: A201-21989 ver. 1 Seismic Retrofit (11/11/05)

§ 9.10.3 If, after Substantial Completion of the Work, final completion thereof is materially delayed through no fault of the Contractor or by issuance of Change Orders affecting final completion, and the Architect and Owner so confirms, the Owner shall, upon application by the Contractor and certification by the Architect, and without terminating the Contract, make payment of the balance due for that portion of the Work fully completed and accepted. If the remaining balance for Work not fully completed or corrected is less than retainage stipulated in the Contract Documents, and if bonds have been furnished, the written consent of surety to payment of the balance due for that portion of the Work fully completed and accepted shall be submitted by the Contractor to the Owner and Architect prior to certification of such payment. Such payment shall be made under terms and conditions governing final payment, except that it shall not constitute a waiver of claims.

§ 9.10.4 The making of final payment shall constitute a waiver of Claims by the Owner except those arising from:

.1 liens, Claims, security interests or encumbrances arising out of the Contract and unsettled;
.2 failure of the Work to comply with the requirements of the Contract Documents; or
.3 terms of special warranties required by the Contract Documents or applicable laws.

§ 9.10.5 Acceptance of final payment by the Contractor, a Subcontractor or material supplier shall constitute a waiver of claims by that payee except those previously made in writing and identified by that payee as unsettled at the time of final Application for Payment.

ARTICLE 10 PROTECTION OF PERSONS AND PROPERTY

§ 10.1 SAFETY PRECAUTIONS AND PROGRAMS

§ 10.1.1 The Contractor shall be responsible for initiating, maintaining and supervising all safety precautions and programs in connection with the performance of the Contract.

§ 10.2 SAFETY OF PERSONS AND PROPERTY

§ 10.2.1 The Contractor shall take reasonable precautions for safety of, and shall provide reasonable protection to prevent damage, injury or loss to:

.1 employees on the Work and other persons who may be affected thereby;
.2 the Work and materials and equipment to be incorporated therein, whether in storage on or off the site, under care, custody or control of the Contractor or the Contractor's Subcontractors or Sub-subcontractors; and
.3 other property at the site or adjacent thereto, such as trees, shrubs, lawns, walks, pavements, roadways, structures and utilities not designated for removal, relocation or replacement in the course of construction.

§ 10.2.2 The Contractor shall give notices and comply with applicable laws, ordinances, rules, regulations and lawful orders of public authorities bearing on safety of persons or property or their protection from damage, injury or loss.

§ 10.2.3 The Contractor shall erect and maintain, as required by existing conditions and performance of the Contract, reasonable safeguards for safety and protection, including posting danger signs and other warnings against hazards, promulgating safety regulations and notifying owners and users of adjacent sites and utilities.

§ 10.2.4 When use or storage of explosives or other hazardous materials or equipment or unusual methods are necessary for execution of the Work, the Contractor shall exercise utmost care and carry on such activities under supervision of properly qualified personnel.

§ 10.2.5 The Contractor shall promptly remedy damage and loss (other than damage or loss insured under property insurance required by the Contract Documents) to property referred to in Sections 10.2.1.2 and 10.2.1.3 caused in whole or in part by the Contractor, a Subcontractor, a Sub-subcontractor, or anyone directly or indirectly employed by any of them, or by anyone for whose acts they may be liable and for which the Contractor is responsible under Sections 10.2.1.2 and 10.2.1.3, except damage or loss attributable to the sole negligence or willful misconduct of the Owner or Architect or anyone directly or indirectly employed by either of them, or by anyone for whose acts either of them may be liable, and not attributable to the fault or negligence of the Contractor. The foregoing obligations of the Contractor are in addition to the Contractor's obligations under Section 3.18.

AIA Document A201™ – 1997. Copyright © 1911, 1915, 1918, 1925, 1937, 1951, 1958, 1961, 1963, 1966, 1970, 1976, 1987 and 1997 by The American Institute of Architects. All rights reserved. WARNING: This AIA® Document is protected by U.S. Copyright Law and International Treaties. Unauthorized reproduction or distribution of this AIA® Document, or any portion of it, may result in severe civil and criminal penalties, and will be prosecuted to the maximum extent possible under the law. This document was produced by AIA software at 20:17:08 on 01/09/2006 under Order No.1000179669_1 which expires on 5/16/2006, and is not for resale.
User Notes: A201-21989 ver. 1 Seismic Retrofit (11/11/05)

(1304079764)

§ 10.2.6 The Contractor shall designate a responsible member of the Contractor's organization at the site whose duty shall be the prevention of accidents. This person shall be the Contractor's superintendent unless otherwise designated by the Contractor in writing to the Owner and Architect.

§ 10.2.7 The Contractor shall not load or permit any part of the construction or site to be loaded so as to endanger the safety of persons and property, nor shall Contractor violate any of the Contract Documents or applicable ordinances relating to the loading of persons or property at the Project.

§ 10.3 HAZARDOUS MATERIALS

§ 10.3.1 If reasonable precautions will be inadequate to prevent foreseeable bodily injury or death to persons resulting from a material or substance, including but not limited to asbestos or polychlorinated biphenyl (PCB), encountered on the site by the Contractor, the Contractor shall, upon recognizing the condition, immediately stop Work in the affected area and report the condition to the Owner and Architect in writing.

§ 10.3.2 The Owner shall obtain the services of a licensed laboratory to verify the presence or absence of the material or substance reported by the Contractor and, in the event such material or substance is found to be present, to verify that it has been rendered harmless. Unless otherwise required by the Contract Documents, the Owner shall furnish in writing to the Contractor and Architect the names and qualifications of persons or entities who are to perform tests verifying the presence or absence of such material or substance or who are to perform the task of removal or safe containment of such material or substance. The Contractor and the Architect will promptly reply to the Owner in writing stating whether or not either has reasonable objection to the persons or entities proposed by the Owner. If either the Contractor or Architect has an objection to a person or entity proposed by the Owner, the Owner shall propose another to whom the Contractor and the Architect have no reasonable objection. When the material or substance has been rendered harmless, Work in the affected area shall resume upon written agreement of the Owner and Contractor. The Contract Time shall be extended appropriately as provided in Article 8.

§ 10.3.3 Contractor shall not cause or permit any "Hazardous Materials" (as herein defined) to be brought upon, kept or used in or about the job site except to the extent such Hazardous Materials: (i) are necessary for the prosecution of the Work; (ii) are required pursuant to the Contract Documents; and (iii) have been approved in writing by Owner. Any Hazardous Materials allowed to be used on the job site shall be used, stored and disposed of in compliance with all applicable federal, state and local laws relating to such Hazardous Materials. Any unused or surplus Hazardous Materials allowed to be used on the job site shall be used, stored and disposed of in compliance with all applicable federal, state and local laws relating to such Hazardous Materials. Any unused or surplus Hazardous Materials, as well as any other Hazardous Materials which have been placed, released or discharged on the job site by Contractor or any of its Subcontractors, employees, agents, suppliers or sub-subcontractors, shall be removed from the job site at the earlier of: (i) completion of the Work requiring the use of such Hazardous Materials; (ii) the completion of the Work as a whole; or (iii) within twenty-four (24) hours following Owner's demand for such removal. Such removal shall be undertaken by Contractor at its sole cost and expense, and shall be performed in accordance with all applicable laws. Any damage to the Work, the job site or any adjacent property resulting from the improper use, or any discharge or release, of Hazardous Materials shall be remedied by Contractor at its sole cost and expense, and in compliance with all applicable laws. Contractor shall immediately notify Owner of any release or discharge of any Hazardous Materials on the job site. Contractor shall provide Owner with copies of all warning labels on products which Contractor or any of its Subcontractors or sub-subcontractors will be using in connection with the Work, and Contractor shall be responsible for making any and all disclosures required under applicable "Community Right-to-Know" laws. Contractor shall not clean or service any tools, equipment, vehicles, materials or other items in such a manner as to cause a violation of laws or regulations relating to Hazardous Materials. All residue and waste materials resulting from any such cleaning or servicing shall be collected and removed from the job site in accordance with all applicable laws and regulations. Contractor shall - immediately notify Owner of any citations, orders or warnings issued to or received by Contractor, or of which Contractor otherwise becomes aware, which relate to any Hazardous Materials on the job site. Without limiting any other indemnification provisions pursuant to law or specified in this Contract, Contractor shall indemnify, defend (at Contractor's sole cost, and with legal counsel approved by Owner) and hold the Owner and the Lender harmless from and against any all claims, demands, losses, damages, disbursements, liabilities, obligations, fines, penalties, costs and expenses in removing or remediating the effect of any Hazardous Materials on, under, from or about the job site, arising out of or relating to, directly or indirectly, Contractor's failure to comply with any of the requirements of this Subparagraph 10.3.3. As used herein, the term "Hazardous Materials" means any hazardous or toxic substances, materials and wastes listed in the United States Department of Transportation Hazardous Materials Table (49 CFR 171.101) or listed by the

AIA Document A201™ – 1997. Copyright © 1911, 1915, 1918, 1925, 1937, 1951, 1958, 1961, 1963, 1966, 1970, 1976, 1987 and 1997 by The American Institute of Architects. All rights reserved. WARNING: This AIA® Document is protected by U.S. Copyright Law and International Treaties. Unauthorized reproduction or distribution of this AIA® Document, or any portion of it, may result in severe civil and criminal penalties, and will be prosecuted to the maximum extent possible under the law. This document was produced by AIA software at 20:17:08 on 01/09/2006 under Order No.1000179669_1 which expires on 5/16/2006, and is not for resale.
User Notes: A201-21989 ver. 1 Seismic Retrofit (11/11/05) (1304079764)

Environmental Protection Agency as hazardous substances (40 CFR Part 302) and any amendments thereto, and any substances, materials or wastes that are or become regulated under federal, state or local law.

§ 10.4 The Owner shall not be responsible under Section 10.3 for materials and substances brought to the site by the Contractor unless such materials or substances were required by the Contract Documents.

§ 10.5 [Intentionally Deleted]§ 10.6 EMERGENCIES

(Paragraph deleted)

§ 10.6.1 In an emergency affecting safety of persons or property, the Contractor shall act, at the Contractor's discretion, to prevent threatened damage, injury or loss. Additional compensation or extension of time claimed by the Contractor on account of an emergency shall be determined as provided in Section 4.3 and Article 7.

ARTICLE 11 INSURANCE AND BONDS

§ 11.1 CONTRACTOR'S LIABILITY INSURANCE

§ 11.1.1 The Contractor shall purchase from and maintain in a company or companies to which Owner has no reasonable objection, which have a Best's Rating of "A", with financial size category of at least XII or better, and which are lawfully authorized to do business in the jurisdiction in which the Project is located such insurance as will protect the Contractor from claims set forth below which may arise out of or result from the Contractor's operations under the Contract and for which the Contractor may be legally liable, whether such operations be by the Contractor or by a Subcontractor or by anyone directly or indirectly employed by any of them, or by anyone for whose acts any of them may be liable:

.1 claims under workers' compensation, disability benefit and other similar employee benefit acts which are applicable to the Work to be performed;

.2 claims for damages because of bodily injury, occupational sickness or disease, or death of the Contractor's employees;

.3 claims for damages because of bodily injury, sickness or disease, or death of any person other than the Contractor's employees;

.4 claims for damages insured by usual personal injury liability coverage;

.5 claims for damages, other than to the Work itself, because of injury to or destruction of tangible property, including loss of use resulting therefrom;

.6 claims for damages because of bodily injury, death of a person or property damage arising out of ownership, maintenance or use of a motor vehicle;

.7 claims for bodily injury or property damage arising out of completed operations; and

.8 claims involving contractual liability insurance applicable to the Contractor's obligations under Section 3.18.

§ 11.1.2 The insurance required by Section 11.1.1 shall be written for not less than limits of liability specified in the Contract Documents or required by law, whichever coverage is greater. Coverages shall be written on an occurrence basis, and shall be maintained without interruption from date of commencement of the Work until date of final payment and termination of any coverage required to be maintained after final payment.

§ 11.1.3 Certificates of insurance acceptable to the Owner and copies of the insurance policies, shall be filed with the Owner's Procurement Department, Andrew Conover, and the additional insureds at least ten (10) days prior to commencement of the Work. These certificates and the insurance policies required by this Section 11.1 shall contain a provision that coverages afforded under the policies will not be canceled, reduced or allowed to expire until at least 30 days' prior written notice has been given to the Owner. If any of the foregoing insurance coverages are required to remain in force after final payment and are reasonably available, an additional certificate evidencing continuation of such coverage shall be submitted with the final Application for Payment as required by Section 9.10.2. Information concerning reduction of coverage on account of revised limits or claims paid under the General Aggregate, or both, shall be furnished by the Contractor with reasonable promptness in accordance with the Contractor's information and belief. Upon receipt of any notice of cancellation or alteration, Contractor, within ten (10) days, shall procure other policies of insurance, similar in all respects to the policy or policies, about to be canceled or altered; and, if Contractor fails to provide, procure and deliver acceptable policies of insurance or satisfactory evidence thereof, in accordance with the terms hereof, then at Owner 's option, Owner may obtain such insurance at the cost and expense of Contractor (and such costs shall not be deemed a Cost of the Work), without the need of any notice to Contractor.

AIA Document A201™ – 1997. Copyright © 1911, 1915, 1918, 1925, 1937, 1951, 1958, 1961, 1963, 1966, 1970, 1976, 1987 and 1997 by The American Institute of Architects. All rights reserved. WARNING: This AIA® Document is protected by U.S. Copyright Law and International Treaties. Unauthorized reproduction or distribution of this AIA® Document, or any portion of it, may result in severe civil and criminal penalties, and will be prosecuted to the maximum extent possible under the law. This document was produced by AIA software at 10:40:16 on 01/10/2006 under Order No.1000179669_1 which expires on 5/16/2006, and is not for resale.
User Notes: A201-21989 ver. 1 Seismic Retrofit (11/11/05) (1429927410)

§ 11.1.4 All insurance to be carried by Contractor shall state, by endorsement, that Contractor's insurance is primary and that any liability insurance maintained by Owner or any other additional insured is excess and non-contributory. Contractor shall not commence Work under this Contract until it has obtained all insurance required hereunder and certificates of insurance and copies of all policies and endorsements evidencing such insurance have been submitted to and approved in writing by Owner. Contractor shall not allow any Subcontractor to commence Work until such Subcontractor has obtained insurance as required pursuant to the Contract Documents.

§ 11.2 OWNER'S LIABILITY INSURANCE

§ 11.2.1 [Intentionally Deleted.]

§ 11.3 PROJECT MANAGEMENT PROTECTIVE LIABILITY INSURANCE

§ 11.3.1 [Intentionally Deleted.]

§ 11.3.2 [Intentionally Deleted.]

§ 11.3.3 [Intentionally Deleted.]

§ 11.4 PROPERTY INSURANCE

§ 11.4.1 Contractor shall purchase and maintain, in a company or companies lawfully authorized to do business in the jurisdiction in which the Project is located, property insurance written on a builder's risk "all-risk" or equivalent policy form in the amount of the initial Contract Sum, plus value of subsequent Contract modifications and cost of materials supplied or installed by others, comprising total value for the entire Project at the site on a replacement cost basis. Such property insurance shall be maintained, unless otherwise provided in the Contract Documents or otherwise agreed in writing by all persons and entities who are beneficiaries of such insurance, until final payment has been made as provided in Section 9.10 or until no person or entity other than the Owner has an insurable interest in the property required by this Section 11.4 to be covered, whichever is later. This insurance shall include interests of the Owner, the Contractor, Subcontractors and Sub-subcontractors in the Project.

§ 11.4.1.1 Property insurance shall be on an "all-risk" or equivalent policy form and shall include, without limitation, insurance against the perils of fire (with extended coverage) and physical loss or damage including, without duplication of coverage, theft, vandalism, malicious mischief, collapse, windstorm, falsework, testing and startup, temporary buildings and debris removal including demolition occasioned by enforcement of any applicable legal requirements, and shall cover reasonable compensation for Architect's and Contractor's services and expenses required as a result of such insured loss.

§ 11.4.1.2 [Intentionally Deleted.]

§ 11.4.1.3 If the property insurance requires deductibles, Contractor shall pay costs not covered because of such deductibles if Contractor or its Subcontractors of any tier caused the loss.

§ 11.4.1.4 [Intentionally Deleted.]

§ 11.4.1.5 [Intentionally Deleted.]

§ 11.4.2 [Intentionally Deleted.]

§ 11.4.3 [Intentionally Deleted.]

§ 11.4.4 [Intentionally Deleted.]

§ 11.4.5 If during the Project construction period the Owner insures properties, real or personal or both, at or adjacent to the site by property insurance under policies separate from those insuring the Project, or if after final payment property insurance is to be provided on the completed Project through a policy or policies other than those insuring the Project during the construction period, the Owner shall waive all rights in accordance with the terms of Section 11.4.7 for damages caused by fire or other causes of loss covered by this separate property insurance. All separate policies shall provide this waiver of subrogation by endorsement or otherwise.

AIA Document A201™ – 1997. Copyright © 1911, 1915, 1918, 1925, 1937, 1951, 1958, 1961, 1963, 1966, 1970, 1976, 1987 and 1997 by The American Institute of Architects. All rights reserved. WARNING: This AIA® Document is protected by U.S. Copyright Law and International Treaties. Unauthorized reproduction or distribution of this AIA® Document, or any portion of it, may result in severe civil and criminal penalties, and will be prosecuted to the maximum extent possible under the law. This document was produced by AIA software at 10:40:16 on 01/10/2006 under Order No.1000179669_1 which expires on 5/16/2006, and is not for resale.
User Notes: A201-21989 ver. 1 Seismic Retrofit (11/11/05)

(1429927410)

§ 11.4.6 Before an exposure to loss may occur, the Contractor shall file with the Owner a copy of each policy that includes insurance coverages required by this Section 11.4. Each policy shall contain all generally applicable conditions, definitions, exclusions and endorsements related to this Project. Each policy shall contain a provision that the policy will not be canceled or allowed to expire, and that its limits will not be reduced, until at least 30 days' prior written notice has been given to the Contractor.

§ 11.4.7 Waivers of Subrogation. The Owner and Contractor waive all rights against (1) each other and any of their subcontractors, sub-subcontractors, agents and employees, each of the other, and (2) the Architect, Architect's consultants, separate contractors described in Article 6, if any, and any of their subcontractors, sub-subcontractors, agents and employees, for damages caused by fire or other causes of loss to the extent covered and paid by property insurance obtained pursuant to this Section 11.4 or other property insurance applicable to the Work, except such rights as they have to proceeds of such insurance held by the Owner as fiduciary. The Owner or Contractor, as appropriate, shall require of the Architect, Architect's consultants, separate contractors described in Article 6, if any, and the subcontractors, sub-subcontractors, agents and employees of any of them, by appropriate agreements, written where legally required for validity, similar waivers each in favor of other parties enumerated herein. The policies shall provide such waivers of subrogation by endorsement or otherwise. A waiver of subrogation shall be effective as to a person or entity even though that person or entity would otherwise have a duty of indemnification, contractual or otherwise, did not pay the insurance premium directly or indirectly, and whether or not the person or entity had an insurable interest in the property damaged.

§ 11.4.8 A loss insured under Owner's property insurance shall be adjusted by the Owner as fiduciary and made payable to the Owner as fiduciary for the insureds, as their interests may appear, subject to requirements of any applicable mortgagee clause and of Section 11.4.10. The Contractor shall pay Subcontractors their just shares of insurance proceeds received by the Contractor, and by appropriate agreements, written where legally required for validity, shall require Subcontractors to make payments to their Sub-subcontractors in similar manner.

§ 11.4.9 If required in writing by a party in interest, the Owner as fiduciary shall, upon occurrence of an insured loss, give bond for proper performance of the Owner's duties. The cost of required bonds shall be charged against proceeds received as fiduciary. The Owner shall deposit in a separate account proceeds so received, which the Owner shall distribute in accordance with such agreement as the parties in interest may reach. If after such loss no other special agreement is made and unless the Owner terminates the Contract for convenience, replacement of damaged property shall be performed by the Contractor after notification of a Change in the Work in accordance with Article 7.

§ 11.4.10 The Owner as fiduciary shall have power to adjust and settle a loss with insurers unless one of the parties in interest shall object in writing within five days after occurrence of loss to the Owner's exercise of this power; if such objection is made, the dispute shall be resolved as provided in Sections 4.5.

§ 11.5 PERFORMANCE BOND AND PAYMENT BOND

§ 11.5.1 The Owner shall require the Contractor to furnish bonds covering faithful performance of the Contract and payment of obligations arising thereunder and in accordance with California Civil Code Section 3247. The cost of such bonds is included in the Guaranteed Maximum Price. The Owner and Lender shall be dual obligees on any such bonds. Such bonds shall cover the faithful and full performance of the Contract, the payment of all obligations arising thereunder, and the lien-free completion of the Contract and the Work. The Surety Company issuing such bonds shall be licensed in the State where the Project is located. Such bonds shall provide "Any alterations which may be made in the terms of the Contract Documents or in the Work to be done thereunder, or the giving by the Obligee of any extension of time for the performance of the Contract Documents, or any other forbearance on the part of either the Obligee or Principal to the other, shall not in any way release the Surety or the Principal from the obligations of the Bond, notice to Surety of any such alteration, extension or forbearance being waived by Surety."

§ 11.5.2 Upon the request of any person or entity appearing to be a potential beneficiary of bonds covering payment of obligations arising under the Contract, the Contractor shall promptly furnish a copy of the bonds or shall permit a copy to be made.

§ 11.6 The commercial general liability policy maintained by the Contractor pursuant to the Contract Documents shall name, by endorsement (ISO form G 20 10 11 85), Owner, Owner's Board of Governors, Lender, and Owner's members, partners, and all employees, agents and representatives of such partners, and any lender with an interest in

AIA Document A201™ – 1997. Copyright © 1911, 1915, 1918, 1925, 1937, 1951, 1958, 1961, 1963, 1966, 1970, 1976, 1987 and 1997 by The American Institute of Architects. All rights reserved. WARNING: This AIA® Document is protected by U.S. Copyright Law and International Treaties. Unauthorized reproduction or distribution of this AIA® Document, or any portion of it, may result in severe civil and criminal penalties, and will be prosecuted to the maximum extent possible under the law. This document was produced by AIA software at 10:40:16 on 01/10/2006 under Order No.1000179669_1 which expires on 5/16/2006, and is not for resale.
User Notes: A201-21989 ver. 1 Seismic Retrofit (11/11/05)

(1429927410)

the Project as additional insureds. The interests of Owner, the Contractor, Subcontractors and any Sub-subcontractors in any insurance proceeds shall be subject to the interest of any such lender, and the right of such lender to apply the proceeds pursuant to the terms of its deed of trust.

ARTICLE 12 UNCOVERING AND CORRECTION OF WORK

§ 12.1 UNCOVERING OF WORK

§ 12.1.1 If a portion of the Work is covered contrary to the Architect's request or to requirements specifically expressed in the Contract Documents, it must, if required in writing by the Architect, be uncovered for the Architect's examination and be replaced at the Contractor's expense without change in the Contract Time.

§ 12.1.2 If a portion of the Work has been covered which the Architect has not specifically requested to examine prior to its being covered, the Architect may request to see such Work and it shall be uncovered by the Contractor. If such Work is in accordance with the Contract Documents, costs of uncovering and replacement shall, by appropriate Change Order, be at the Owner's expense. If such Work is not in accordance with the Contract Documents, correction shall be at the Contractor's expense unless the condition was caused by the Owner or a separate contractor in which event the Owner shall be responsible for payment of such costs.

§ 12.2 CORRECTION OF WORK

§ 12.2.1 BEFORE OR AFTER SUBSTANTIAL COMPLETION

§ 12.2.1.1 The Contractor shall promptly correct Work rejected by the Owner or Architect or failing to conform to the requirements of the Contract Documents, whether discovered before or after Substantial Completion and whether or not fabricated, installed or completed. Costs of correcting such rejected Work, including additional testing and inspections and compensation for the Architect's services and expenses made necessary thereby, shall be at the Contractor's expense.

§ 12.2.2 AFTER SUBSTANTIAL COMPLETION

§ 12.2.2.1 In addition to the Contractor's obligations under Section 3.5, if, within one year after the date of Substantial Completion of the Work or designated portion thereof or after the date for commencement of warranties established under Section 9.9.1, or by terms of an applicable special warranty required by the Contract Documents, any of the Work is found to be not in accordance with the requirements of the Contract Documents, the Contractor shall correct it promptly at Contractor's sole expense after receipt of written notice from the Owner to do so unless the Owner has previously given the Contractor a written acceptance of such condition. The Owner shall give such notice promptly after discovery of the condition. During the one-year period for correction of Work, if the Owner fails to notify the Contractor and give the Contractor an opportunity to make the correction, the Owner waives the rights to require correction by the Contractor and to make a claim for breach of warranty. If the Contractor fails to correct nonconforming Work within a reasonable time during that period after receipt of notice from the Owner or Architect, the Owner may correct it in accordance with Paragraph 2.4.

§ 12.2.2.2 The one-year period for correction of Work shall be extended with respect to portions of Work first performed after Substantial Completion by the period of time between Substantial Completion and the actual performance of the Work.

§ 12.2.2.3 The one-year period for correction of Work shall not be extended by corrective Work performed by the Contractor pursuant to this Section 12.2.

§ 12.2.3 The Contractor shall remove from the site portions of the Work which are not in accordance with the requirements of the Contract Documents and are neither corrected by the Contractor nor accepted by the Owner.

§ 12.2.4 The Contractor shall bear the cost of correcting destroyed or damaged construction, whether completed or partially completed, of the Owner or separate contractors caused by the Contractor's correction or removal of Work which is not in accordance with the requirements of the Contract Documents.

§ 12.2.5 Nothing contained in this Section 12.2 shall be construed to establish a period of limitation with respect to other obligations which the Contractor might have under the Contract Documents. Establishment of the one-year period for correction of Work as described in Section 12.2.2 relates only to the specific obligation of the Contractor to correct the Work, and has no relationship to the time within which the obligation to comply with the Contract

AIA Document A201™ – 1997. Copyright © 1911, 1915, 1918, 1925, 1937, 1951, 1958, 1961, 1963, 1966, 1970, 1976, 1987 and 1997 by The American Institute of Architects. All rights reserved. WARNING: This AIA® Document is protected by U.S. Copyright Law and International Treaties. Unauthorized reproduction or distribution of this AIA® Document, or any portion of it, may result in severe civil and criminal penalties, and will be prosecuted to the maximum extent possible under the law. This document was produced by AIA software at 10:40:16 on 01/10/2006 under Order No.1000179669_1 which expires on 5/16/2006, and is not for resale.
User Notes: A201-21989 ver. 1 Seismic Retrofit (11/11/05)
(1429927410)

Documents may be sought to be enforced, nor to the time within which proceedings may be commenced to establish the Contractor's liability with respect to the Contractor's obligations other than specifically to correct the Work.

§ 12.2.6 Nothing contained in this Contract shall in any way limit the right of Owner to assert claims for damages resulting from patent or latent defects in the Work for the period of limitations prescribed by California law, and the foregoing shall be in addition to any other rights and remedies Owner may have hereunder or at law or in equity.

§ 12.3 ACCEPTANCE OF NONCONFORMING WORK

§ 12.3.1 If the Owner prefers to accept Work which is not in accordance with the requirements of the Contract Documents, the Owner may do so instead of requiring its removal and correction, in which case the Contract Sum will be reduced as appropriate and equitable. Such adjustment shall be effected whether or not final payment has been made.

ARTICLE 13 MISCELLANEOUS PROVISIONS

§ 13.1 GOVERNING LAW

§ 13.1.1 The Contract shall be governed by the law of the place where the Project is located.

§ 13.2 SUCCESSORS AND ASSIGNS

§ 13.2.1 The Owner and Contractor respectively bind themselves, their partners, successors, assigns and legal representatives to the other party hereto and to partners, successors, assigns and legal representatives of such other party in respect to covenants, agreements and obligations contained in the Contract Documents. Contractor may not assign, in whole or in part, the Contract without first obtaining the written consent of the Owner.

§ 13.2.2 The Owner may, without consent of the Contractor, assign the Contract to an affiliated or related entity, or to an institutional lender providing construction financing for the Project. In such event, the lender shall assume the Owner's rights and obligations under the Contract Documents. The Contractor shall execute all consents reasonably required to facilitate such assignment.

§ 13.3 WRITTEN NOTICE

§ 13.3.1 Written notice shall be deemed to have been duly served if delivered in person to the individual or a member of the firm or entity or to an officer of the corporation for which it was intended, or if delivered at or sent by registered or certified mail to the last business address known to the party giving notice.

§ 13.4 RIGHTS AND REMEDIES

§ 13.4.1 Duties and obligations imposed by the Contract Documents and Owner's rights and remedies available thereunder shall be in addition to and not a limitation of duties, obligations, Owner's rights and remedies otherwise imposed or available by law.

§ 13.4.2 No action or failure to act by the Owner, Architect or Contractor shall constitute a waiver of a right or duty afforded them under the Contract, nor shall such action or failure to act constitute approval of or acquiescence in a breach thereunder, except as may be specifically agreed in writing.

§ 13.4.3 Notwithstanding any other provision to the contrary contained in the Contract Documents, provided that Owner continues to make payments of amounts not in dispute in accordance with the provisions of the Contract Documents, during all disputes, actions or claims and other matters in question arising out of, or relating to, the Contract Documents or the breach thereof, Contractor shall carry on the Work and maintain the Schedule, unless otherwise agreed between Contractor and Owner in writing.

§ 13.5 TESTS AND INSPECTIONS

§ 13.5.1 Tests, inspections and approvals of portions of the Work required by the Contract Documents or by laws, ordinances, rules, regulations or orders of public authorities having jurisdiction shall be made at an appropriate time. Unless otherwise provided, the Contractor shall make arrangements for such tests, inspections and approvals with an independent testing laboratory selected by Owner, or with the appropriate public authority, and shall bear all related costs of tests, inspections and approvals. The Contractor shall give the Architect timely notice of when and where tests and inspections are to be made so that the Owner and its representatives may be present for such procedures. The Owner shall bear costs of tests, inspections or approvals which do not become requirements until after bids are received or negotiations concluded.

AIA Document A201™ – 1997. Copyright © 1911, 1915, 1918, 1925, 1937, 1951, 1958, 1961, 1963, 1966, 1970, 1976, 1987 and 1997 by The American Institute of Architects. All rights reserved. WARNING: This AIA® Document is protected by U.S. Copyright Law and International Treaties. Unauthorized reproduction or distribution of this AIA® Document, or any portion of it, may result in severe civil and criminal penalties, and will be prosecuted to the maximum extent possible under the law. This document was produced by AIA software at 10:40:16 on 01/10/2006 under Order No.1000179869_1 which expires on 5/16/2006, and is not for resale.
User Notes: A201-21989 ver. 1 Seismic Retrofit (11/11/05)
(1429927410)

§ 13.5.2 If the Architect, Owner or public authorities having jurisdiction determine that portions of the Work require additional testing, inspection or approval not included under Section 13.5.1, the Architect will, upon written authorization from the Owner, instruct the Contractor to make arrangements for such additional testing, inspection or approval by an entity acceptable to the Owner, and the Contractor shall give timely notice to the Architect of when and where tests and inspections are to be made so that the Architect may be present for such procedures. Such costs, except as provided in Section 13.5.3, shall be at the Owner's expense.

§ 13.5.3 If such procedures for testing, inspection or approval under Sections 13.5.1 and 13.5.2 reveal failure of the portions of the Work to comply with requirements established by the Contract Documents, all costs made necessary by such failure including those of repeated procedures and compensation for the Architect's services and expenses shall be at the Contractor's expense.

§ 13.5.4 Required certificates of testing, inspection or approval shall, unless otherwise required by the Contract Documents, be secured by the Contractor and promptly delivered to the Architect.

§ 13.5.5 If the Architect is to observe tests, inspections or approvals required by the Contract Documents, the Architect will do so promptly and, where practicable, at the normal place of testing.

§ 13.5.6 Tests or inspections conducted pursuant to the Contract Documents shall be made promptly to avoid unreasonable delay in the Work.

§ 13.6 INTEREST

§ 13.6.1 [Intentionally Deleted.]

§ 13.7 COMMENCEMENT OF STATUTORY LIMITATION PERIOD

§ 13.7.1 [Intentionally Deleted.]

.1 [Intentionally Deleted.]
.2 [Intentionally Deleted.]
.3 [Intentionally Deleted.]

ARTICLE 14 TERMINATION OR SUSPENSION OF THE CONTRACT

§ 14.1 TERMINATION BY THE CONTRACTOR

§ 14.1.1 See Exhibit I.

.1 .2 .3 .4

§ 14.1.2 [Intentionally Deleted.]

§ 14.1.3 [Intentionally Deleted.]

§ 14.1.4 [Intentionally Deleted.]

§ 14.2 TERMINATION BY THE OWNER FOR CAUSE

§ 14.2.1 [Intentionally Deleted.]

.1 [Intentionally Deleted.]
.2 [Intentionally Deleted.]
.3 [Intentionally Deleted.]
.4 [Intentionally Deleted.]

§ 14.2.2 [Intentionally Deleted.]

.1 [Intentionally Deleted.]
.2 [Intentionally Deleted.]
.3 [Intentionally Deleted.]

§ 14.2.3 [Intentionally Deleted.]

§ 14.2.4 [Intentionally Deleted.]

AIA Document A201™ – 1997. Copyright © 1911, 1915, 1918, 1925, 1937, 1951, 1958, 1961, 1963, 1966, 1970, 1976, 1987 and 1997 by The American Institute of Architects. All rights reserved. WARNING: This AIA® Document is protected by U.S. Copyright Law and International Treaties. Unauthorized reproduction or distribution of this AIA® Document, or any portion of it, may result in severe civil and criminal penalties, and will be prosecuted to the maximum extent possible under the law. This document was produced by AIA software at 10:40:16 on 01/10/2006 under Order No.1000179669_1 which expires on 5/16/2006, and is not for resale.
User Notes: A201-21989 ver. 1 Seismic Retrofit (11/11/05) (1429927410)

§ 14.3 SUSPENSION BY THE OWNER FOR CONVENIENCE

§ 14.3.1 The Owner may, without cause, order the Contractor in writing to suspend, delay or interrupt the Work in whole or in part for such period of time as the Owner may determine.

§ 14.3.2 The Contract Sum and Contract Time shall be adjusted for increases in the cost and time caused by suspension, delay or interruption that are in excess of thirty (30) days, as described in Section 14.3.1. Adjustment of the Contract Sum shall include profit. No adjustment shall be made to the extent:

.1 that performance is, was or would have been so suspended, delayed or interrupted by another cause for which the Contractor is responsible; or

.2 that an equitable adjustment is made or denied under another provision of the Contract.

§ 14.4 TERMINATION BY THE OWNER FOR CONVENIENCE

§ 14.4.1 [Intentionally Deleted.]

§ 14.4.2 [Intentionally Deleted.]

.1 [Intentionally Deleted.]

.2 [Intentionally Deleted.]

.3 [Intentionally Deleted.]

§ 14.4.3 [Intentionally Deleted.]

AIA Document A201™ – 1997. Copyright © 1911, 1915, 1918, 1925, 1937, 1951, 1958, 1961, 1963, 1966, 1970, 1976, 1987 and 1997 by The American Institute of Architects. All rights reserved. WARNING: This AIA® Document is protected by U.S. Copyright Law and International Treaties. Unauthorized reproduction or distribution of this AIA® Document, or any portion of it, may result in severe civil and criminal penalties, and will be prosecuted to the maximum extent possible under the law. This document was produced by AIA software at 10:40:16 on 01/10/2006 under Order No.1000179669_1 which expires on 5/16/2006, and is not for resale.
User Notes: A201-21989 ver. 1 Seismic Retrofit (11/11/05)
(1429927410)

EXHIBIT 1

TO GENERAL CONDITIONS

ARTICLE 14

TERMINATION OF THE CONTRACT

14.1 TERMINATION BY OWNER

14.1.1 If Contractor shall fail to commence the Work in accordance with the provisions of this Contract or fail to diligently prosecute the Work to completion thereof in a diligent, efficient, timely, workmanlike, skillful and careful manner and in strict accordance with the provisions of the Contract Documents (including the Contract Time), fail to use an adequate amount or quality of personnel or equipment to complete the Work without undue delay, fail to perform any of its obligations under the Contract Documents, or fail to make prompt payments to its Subcontractors, materialmen or laborers, then Owner shall have the right, if Contractor shall not cure any such default after two (2) business days written notice thereof to (i) terminate the employment of Contractor hereunder and Contractor shall not be entitled to any further compensation whatsoever for any Work undertaken or otherwise, (ii) take possession of and use all or any part of Contractor's materials, equipment, supplies, and other property of every kind used by Contractor in the performance of the Work and to use such property in the completion of the Work, and (iii) complete the Work in any manner it deems desirable, including engaging the services of other parties therefor. If Contractor's default cannot reasonably be cured within the two (2) business day period, and provided that Contractor has commenced the cure and is diligently pursuing such cure to completion, then the time period for curing the default shall be extended for a period not to exceed ten (10) business days. Any such act by Owner shall not be deemed a waiver of any other right or remedy of Owner. If after exercising any such remedy the cost to Owner of the performance of the balance of the Work is in excess of that part of the Guaranteed Maximum Price (including amounts retained from Contractor) which has not theretofore been paid to Contractor hereunder, Contractor shall be liable for and shall reimburse Owner for such excess within ten (10) days of receipt of Owner's demand for reimbursement, and any other damages incurred by Owner due to Contractor's breach, including consequential damages. Following such termination, Contractor will receive payment for Work properly performed by Contractor prior to the termination date, based on the Cost of the Work incurred by Contractor through the termination date and not previously reimbursed by Owner, subject to Owner's right to offset such payments against any damages, losses, costs or expenses Owner incurred resulting from Contractor's default.

14.1.2 It is recognized that if Contractor is adjudged a bankrupt, or makes a general assignment for the benefit of creditors, or if a receiver is appointed for the benefit of its creditors, or if a receiver is appointed on account of its insolvency, such could impair or frustrate Contractor's performance of this Contract. Accordingly, it is agreed that upon the occurrence of any such event, Owner shall be entitled to request of Contractor or its successor in interest

adequate assurance of future performance in accordance with the terms and conditions hereof. Failure to comply with such request within seven (7) days of delivery of the request shall entitle Owner to terminate this Contract and to the accompanying rights set forth above in Subparagraph 14.1.1. In all events pending receipt of adequate assurance of performance and actual performance in accordance therewith, Owner shall be entitled to proceed with the Work with its own forces or with other contractors on a time and material or other appropriate basis the cost of which will be backcharged against the Guaranteed Maximum Price hereof.

14.1.3 Owner reserves the right to terminate this Contract without regard to fault or breach of Contractor, upon not less than fourteen (14) days written notice to Contractor, effective immediately unless otherwise provided in said notice. In the event of such termination, and concurrently with the receipt by Owner of satisfactory lien releases from Contractor and its Subcontractors of every tier, Owner shall pay (including retainage sums) as the sole amount due to Contractor in connection with the Project that portion of the Cost of the Work plus the Contractor's Fee due for Work performed to the date of termination, plus any reasonable restocking charges that could not be avoided and the cost of fabricating special materials that was ordered prior to Owner's termination notice, less any sums already received by Contractor. In no event shall Owner be responsible for Contractor's lost profits or consequential damages.

14.1.4 Upon a determination by a court that termination of Contractor or its successor in interest pursuant to Subparagraphs 14.1.1 or 14.1.2 was wrongful, Contractor's remedy for wrongful termination shall be limited to the recovery of the payments permitted set forth in Subparagraph 14.1.3.

14.1.5 Upon termination of this Contract for any reason, Contractor shall:

14.1.5.1 Forthwith withdraw its employees, workmen, machinery and equipment from the Project in an orderly manner, as directed by the Owner;

14.1.5.2 Within thirty (30) days after such termination, Contractor shall furnish Owner with a complete accounting of the Cost of the Work incurred to the date of termination together with a final status report updating the progress of the Work up to the date of termination;

14.1.5.3 Within five (5) days after said termination, Contractor shall deliver to Owner all of those items enumerated in Subparagraph 9.10.2, above, to the extent that said items are available, all Shop Drawings, Project Data and Samples available, and all other of Contractor's engineering, procurement, accounting and construction documents and records relating to the Work performed under this Contract; and

14.1.5.4 Within five (5) days after said termination, Contractor shall assign to Owner all Contractor's interest in any Subcontracts and purchase orders that Owner so designates in writing.

14.2 TERMINATION BY CONTRACTOR

The Contractor may terminate this Contract if the Owner fails to make payments to Contractor pursuant to Paragraph 9.7 above. Upon such termination, the Contractor's remedy shall be limited to the recovery of payments pursuant to Subparagraph 14.1.3.